APEX DYNAMICS, INC.

AT-L

ATB-L

AT-FL

ATB-FL

AT-H

ATB-H

AT-FH

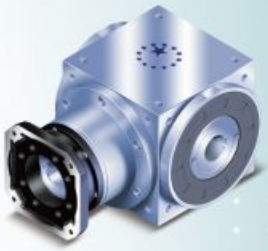

AT-C

AT/ATB SERIES

Stainless Cast Iron

High Precision Spiral Bevel Gearboxes

AT-FC

AT-4M

AT / ATB Series
Characteristic Highlights

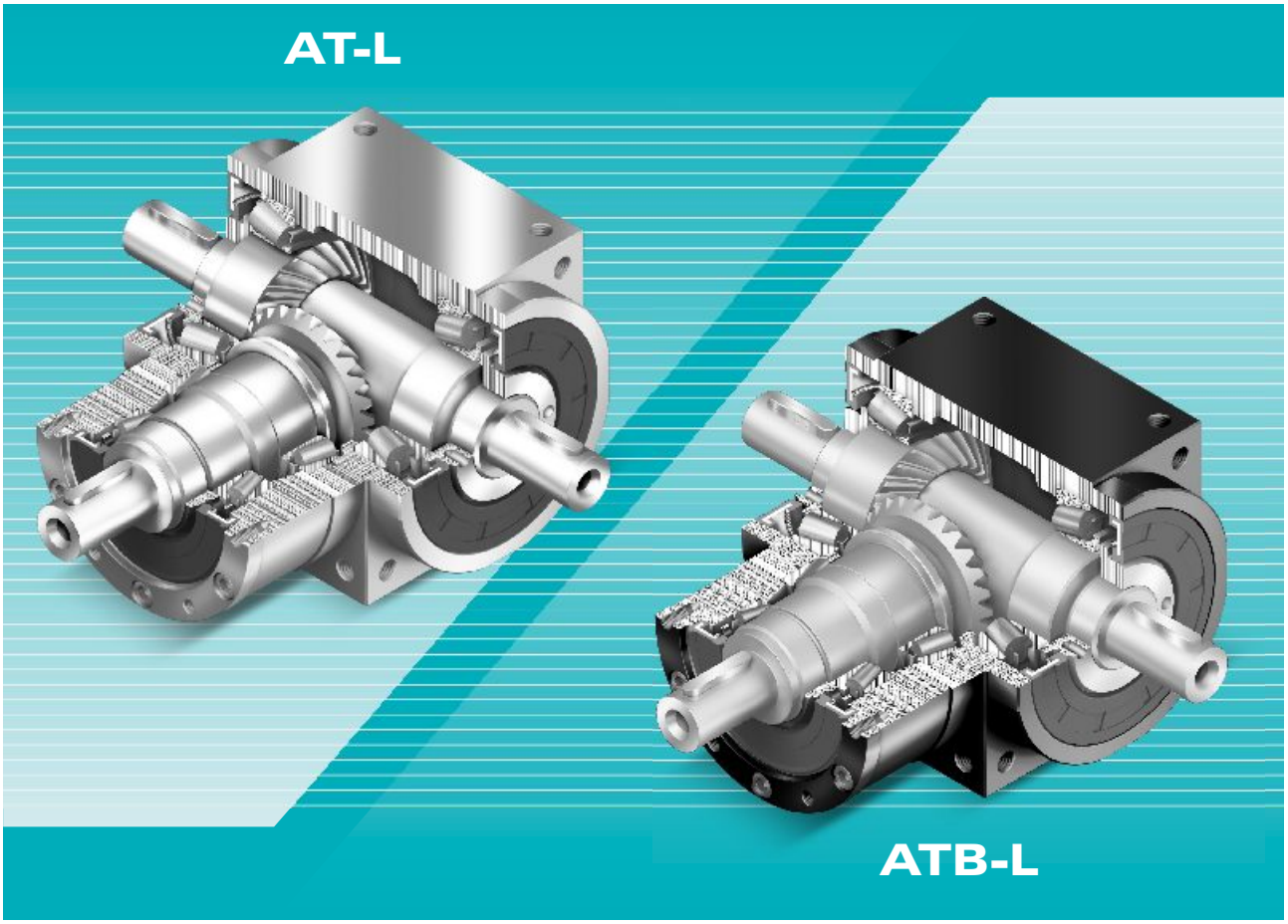

The materials of ATB series, housing is blackened cast iron; input and output shafts are alloy steel.

- Single Piece Stainless Steel housing for maximum rigidity and corrosion resistance. Multiple precision machined surfaces for ease of installation.
- Gearing design is optimized by state of the art software for highest performance. Carburized high tensile alloy steel is precision ground to exceed DIN 5 specifications.
- Stainless steel input and output shaft with multiple design configurations to meet all industrial requirements.
- High precision ground spiral bevel gear sets are combined with optimized planetary geometry to create ratios up to 500:1.
- High torque. Low backlash and compact design are ideal for all servo application.
- Maintenance free, lubricated for life.

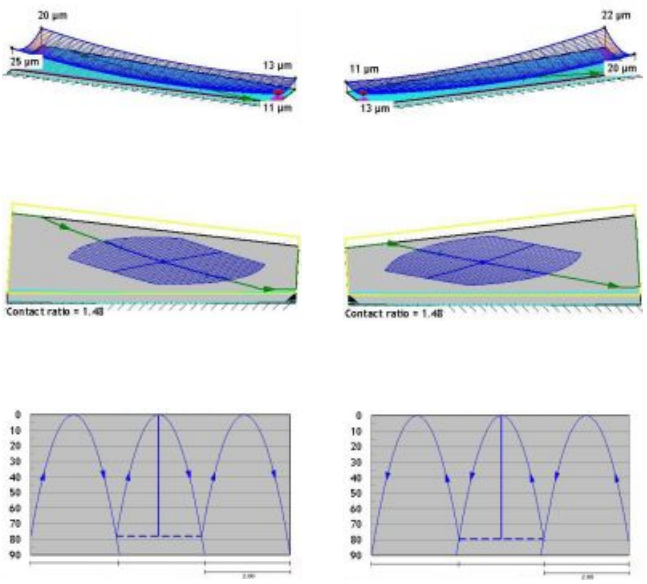

ghv Vertriebs-GmbH | Am Schammacher Feld 47 | 85567 Grafing | Telefon + 49 80 92 81 89 0 | info@ghv.de | www.ghv.de

AT / ATB Shaft Type Series

Specifications

Gearbox Performance

(The performance and specification of ATB series are identical to AT series.)

Model No.		Stage	Ratio[A]	AT065 L AT065 L1 AT065 H AT065 C AT065 R1 AT065 LM AT065 RM AT065 4M	AT075 L AT075 L1 AT075 H AT075 C AT075 R1 AT075 LM AT075 RM AT075 4M	AT090 L AT090 L1 AT090 H AT090 C AT090 R1 AT090 LM AT090 RM AT090 4M	AT110 L AT110 L1 AT110 H AT110 C AT110 R1 AT110 LM AT110 RM AT110 4M	AT140 L AT140 L1 AT140 H AT140 C AT140 R1 AT140 LM AT140 RM AT140 4M	AT170 L AT170 L1 AT170 H AT170 C AT170 R1 AT170 LM AT170 RM AT170 4M	AT210 L AT210 L1 AT210 H AT210 C AT210 R1 AT210 LM AT210 RM AT210 4M	AT240 L AT240 L1 AT240 H AT240 C AT240 R1 AT240 LM AT240 RM AT240 4M	AT280 L AT280 L1 AT280 H AT280 C AT280 R1 AT280 LM AT280 RM AT280 4M
Nominal Output Torque T_{2N}	Nm	1	1	25	45	78	150	360	585	1,300	2,150	3,200
			1.5	25	45	78	150	360	585	1,300	2,150	3.200
			2	24	42	68	150	330	544	1,220	2,010	3,050
			3	18	33	54	120	270	450	1,020	1,650	2,850
			4	13	28	48	100	224	376	860	1,410	2,300
			5	12	25	40	85	196	320	740	1,210	2,000
Max. Acceleration Torque T_{2B}	Nm	1	1~5	1.5 times of Nominal Output Torque								
Max. Acceleration Input Speed n_{1B}	rpm	1	1~5	7,500	6,500	5,500	4,500	3,500	3,000	2,200	2,000	1,700
Standard Backlash[B]	arcmin	1	1~5	≤6	≤6	≤6	≤6	≤6	≤6	≤6	≤6	≤6
Max. Radial Load F_{1rB}[C] Input d1	N	1	1~5	700	950	1,450	2,100	2,700	3,800	7,800	9,600	10,500
Max. Radial Load F_{2rB}[D] Output d2	N	1	1~5	900	1,100	1,700	2,700	4,800	6,600	11,500	16,000	18,000
Max. Axial Load F_{1aB}[C] Input d1	N	1	1~5	350	425	725	1,050	1,350	1,900	3,900	4,800	5,250
Max. Axial Load F_{2aB}[D] Output d2	N	1	1~5	450	550	850	1,350	2,400	3,300	5,750	8,500	9,000
Service Life[E]	hr	1	1~5	20,000								
Efficiency η	%	1	1~5	≥98%								
Operating Temp	°C	1	1~5	-10°C ~ 90°C								
Lubrication				Synthetic lubrication oils								
Noise Level (n_1=1500rpm, No Load)	dB (A)	1	1~5	≤68	≤70	≤74	≤76	≤77	≤78	≤80	≤82	≤83

Gearbox Inertia

(The performance and specification of ATB series are identical to AT series.)

Model No.		Stage	Ratio[A]	AT065 L AT065 L1 AT065 H AT065 C AT065 R1 AT065 LM AT065 RM AT065 4M	AT075 L AT075 L1 AT075 H AT075 C AT075 R1 AT075 LM AT075 RM AT075 4M	AT090 L AT090 L1 AT090 H AT090 C AT090 R1 AT090 LM AT090 RM AT090 4M	AT110 L AT110 L1 AT110 H AT110 C AT110 R1 AT110 LM AT110 RM AT110 4M	AT140 L AT140 L1 AT140 H AT140 C AT140 R1 AT140 LM AT140 RM AT140 4M	AT170 L AT170 L1 AT170 H AT170 C AT170 R1 AT170 LM AT170 RM AT170 4M	AT210 L AT210 L1 AT210 H AT210 C AT210 R1 AT210 LM AT210 RM AT210 4M	AT240 L AT240 L1 AT240 H AT240 C AT240 R1 AT240 LM AT240 RM AT240 4M	AT280 L AT280 L1 AT280 H AT280 C AT280 R1 AT280 LM AT280 RM AT280 4M
Mass Moments of Inertia J_1	kg・cm²	1	1	0.51	1.30	3.16	7.70	23.57	58.99	195.40	369.34	799.12
			1.5	0.64	1.16	2.82	6.74	19.37	49.28	155.45	283.58	595.78
			2	0.44	1.11	2.70	6.31	17.75	45.35	140.24	249.74	511.76
			3	0.43	1.09	2.66	6.17	17.18	44.01	134.95	237.71	483.06
			4	0.43	1.09	2.65	6.13	17.06	43.70	133.58	234.72	476.26
			5	0.43	1.09	2.65	6.12	17.02	43.60	133.14	233.67	473.58

Weight

Model No.		Stage	Ratio[A]	AT065	AT075	AT090	AT110	AT140	AT170	AT210	AT240	AT280
L Series	kg	1	1~5	2.6	4.2	6.8	11.6	19.8	34.8	66.2	98.1	155.7
L1 Series		1	1~5	2.6	4.1	6.7	11.5	19.5	34.2	65.1	96.6	153.4
H Series		1	1~5	2.5	3.9	6.4	11.0	18.1	31.6	60.0	89.4	143.4
C Series		1	1~5	2.8	4.2	6.9	11.4	19.6	33.7	63.3	97.9	149.1
R1 Series		1	1~5	2.6	4.1	6.7	11.5	19.5	34.2	65.1	96.6	153.4
LM Series		1	1	3.5	5.6	9.0	15.2	24.1	42.4	81.4	122.0	190.9
RM Series		1	1	3.5	5.6	9.0	15.2	24.1	42.4	81.4	122.0	190.9
4M Series		1	1	3.5	5.6	9.1	15.4	24.8	42.6	82.5	123.5	193.3

A. Ratio (i= N_{in} / N_{out}). AT-LM / RM / 4M offer ratio 1 : 1 only.
B. Backlash is measured at 2% Nominal Torque T_{2N}.
C. Apply to the input shaft center at n_{1B}.
D. Apply to the output shaft center at n_{1B}.
E. S1 service life 10,000 hrs.

ghv Vertriebs-GmbH | Am Schammacher Feld 47 | 85567 Grafing | Telefon + 49 80 92 81 89 0 | info@ghv.de | www.ghv.de

AT-L / ATB-L Series

Dimensions (1-stage, Ratio i=1~5)

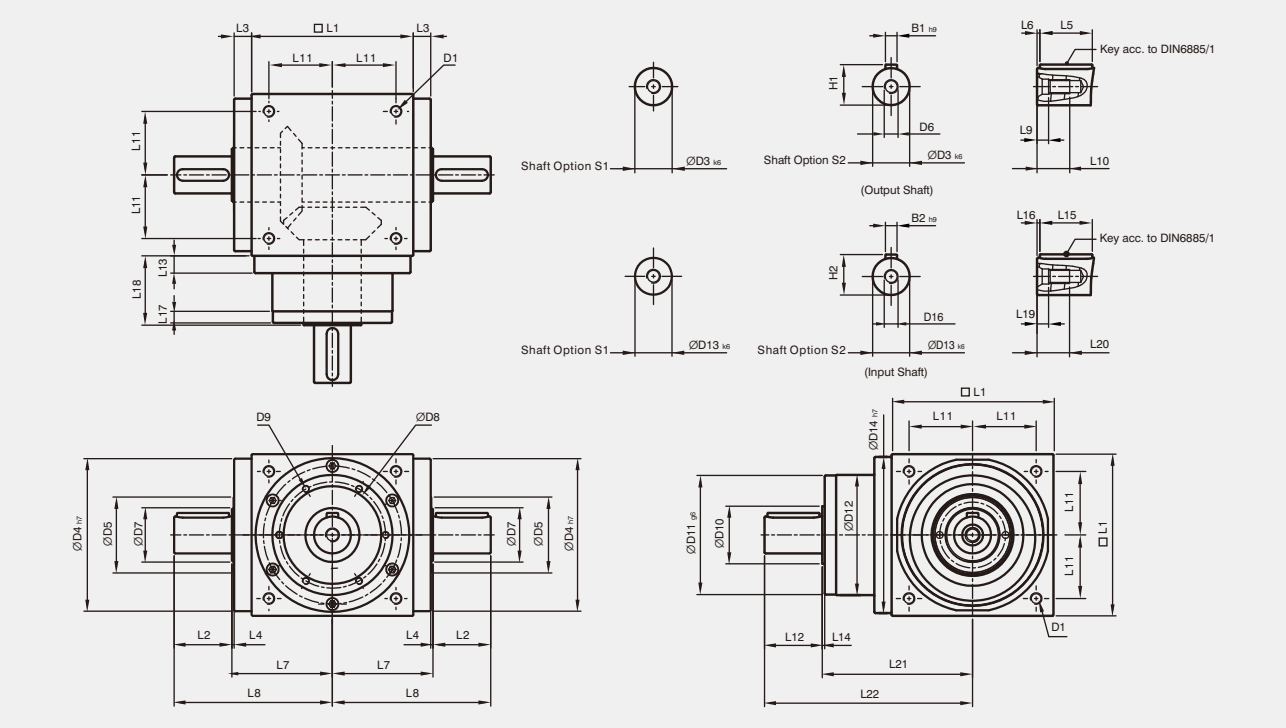

* The dimensions of ATB series are identical to AT series.

[unit: mm]

Dimension	AT065 L	AT075 L	AT090 L	AT110 L	AT140 L	AT170 L	AT210 L	AT240 L	AT280 L
D1	M4	M6	M6	M8	M10	M12	M16	M16	M16
D3 k6	13	16	18	22	32	40	50	55	60
D4 h7	63	73	88	108	135	165	205	235	275
D5	31	35	43	53	68	83	104	124	144
D6	M4	M5	M5	M8	M12	M16	M16	M16	M20
D7	21	22	28	33	47	55	75	85	110
D8	53	62	76	95	92	114	142	160	176
D9	4xM4xL7	4xM5xL8	4xM5xL8	6xM6xL10	6xM6xL10	6xM8xL12.5	6xM8xL12.5	6xM8xL12.5	6xM10xL15
D10	15.4	20.4	25.8	35.8	49.8	59.3	79.3	92.3	102.3
D11 g6	62.9	72.9	87	107	103	127	158	178	198
D12	62	72	86	106	104	128	160	180	200
D13 k6	13	16	18	22	32	40	50	55	60
D14 h7	63	73	88	108	135	165	205	235	275
D16	M4	M5	M5	M8	M12	M16	M16	M16	M20
L1	65	75	90	110	140	170	210	240	280
L2	19.5	30	35	40	50	60	75	85	110
L3	13	14.5	15	15	15	15	20	25	25
L4	2	2	2	2	2	2	2	2	2
L5	16	25	28	32	45	50	70	80	100
L6	2	2.5	3.5	4	2.5	5	2.5	2.5	5
L7	47.5	54	62	72	87	102	127	147	167
L8	67	84	97	112	137	162	202	232	277
L9	4.5	4.8	4.8	7.2	10	12	12	12	15
L10	10	12.5	12.5	19	28	36	36	36	42
L11	27	30	36	44	55	67	85	95	110
L12	19.5	30	35	40	50	60	75	85	110
L13	13	15	15	15	15	15	20	25	25
L14	2	2	2	2	2	2	2	2	2
L15	16	25	28	32	45	50	70	80	100
L16	2	2.5	3.5	4	2.5	5	2.5	2.5	5
L17	6	8	8	8	10	10	10	10	10
L18	43	52.5	55	60	60	70	90	105	120
L19	4.5	4.8	4.8	7.2	10	12	12	12	15
L20	10	12.5	12.5	19	28	36	36	36	42
L21	75.5	90	100	115	130	155	195	225	260
L22	95	120	135	155	180	215	270	310	370
B1 h9	5	5	6	6	10	12	14	16	18
B2 h9	5	5	6	6	10	12	14	16	18
H1	15	18	20.5	24.5	35	43	53.5	59	64
H2	15	18	20.5	24.5	35	43	53.5	59	64

ghv Vertriebs-GmbH | Am Schammacher Feld 47 | 85567 Grafing | Telefon + 49 80 92 81 89 0 | info@ghv.de | www.ghv.de

AT-L1/R1 / ATB-L1/R1 Series

Dimensions (1-stage, Ratio i=1~5)

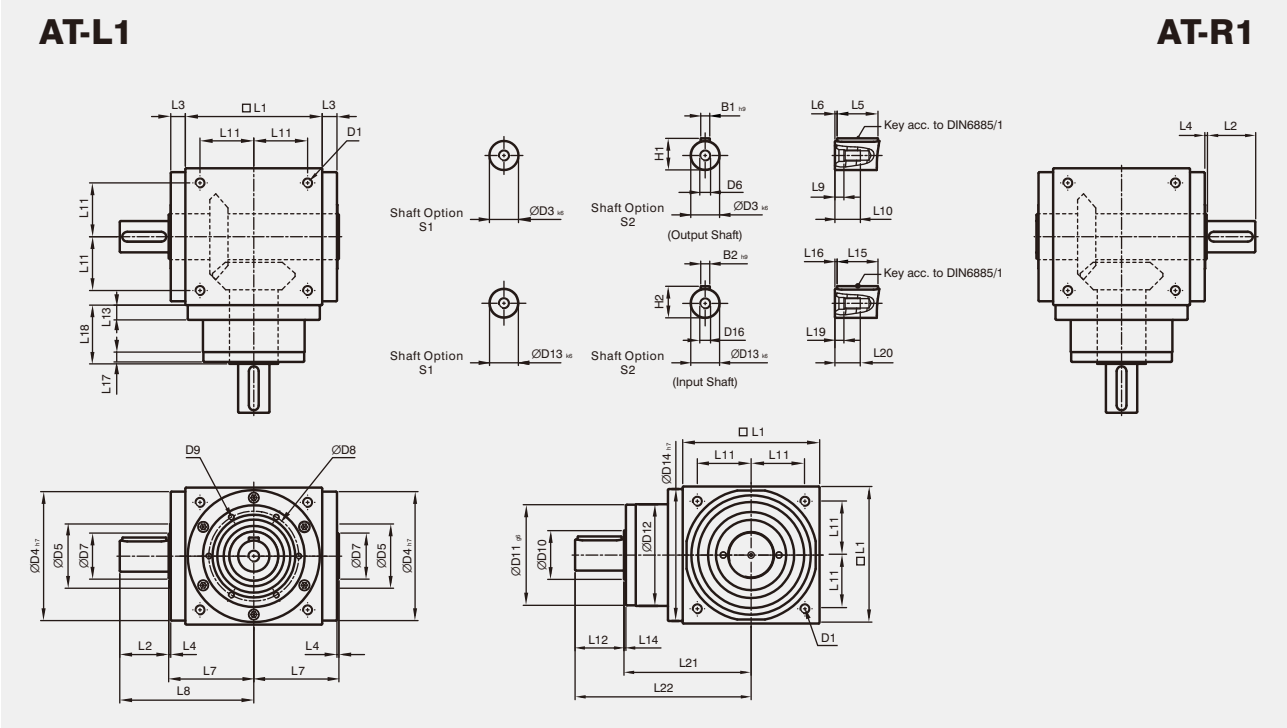

* The dimensions of ATB series are identical to AT series.

[unit: mm]

Dimension	AT065 L1/R1	AT075 L1/R1	AT090 L1/R1	AT110 L1/R1	AT140 L1/R1	AT170 L1/R1	AT210 L1/R1	AT240 L1/R1	AT280 L1/R1
D1	M4	M6	M6	M8	M10	M12	M16	M16	M16
D3 k6	13	16	18	22	32	40	50	55	60
D4 h7	63	73	88	108	135	165	205	235	275
D5	31	35	43	53	68	83	104	124	144
D6	M4	M5	M5	M8	M12	M16	M16	M16	M20
D7	21	22	28	33	47	55	75	85	110
D8	53	62	76	95	92	114	142	160	176
D9	4xM4xL7	4xM5xL8	4xM5xL8	6xM6xL10	6xM6xL10	6xM8xL12.5	6xM8xL12.5	6xM8xL12.5	6xM10xL15
D10	15.4	20.4	25.8	35.8	49.8	59.3	79.3	92.3	102.3
D11 g6	62.9	72.9	87	107	103	127	158	178	198
D12	62	72	86	106	104	128	160	180	200
D13 k6	13	16	18	22	32	40	50	55	60
D14 h7	63	73	88	108	135	165	205	235	275
D16	M4	M5	M5	M8	M12	M16	M16	M16	M20
L1	65	75	90	110	140	170	210	240	280
L2	19.5	30	35	40	50	60	75	85	110
L3	13	14.5	15	15	15	15	20	25	25
L4	2	2	2	2	2	2	2	2	2
L5	16	25	28	32	45	50	70	80	100
L6	2	2.5	3.5	4	2.5	5	2.5	2.5	5
L7	47.5	54	62	72	87	102	127	147	167
L8	67	84	97	112	137	162	202	232	277
L9	4.5	4.8	4.8	7.2	10	12	12	12	15
L10	10	12.5	12.5	19	28	36	36	36	42
L11	27	30	36	44	55	67	85	95	110
L12	19.5	30	35	40	50	60	75	85	110
L13	13	15	15	15	15	15	20	25	25
L14	2	2	2	2	2	2	2	2	2
L15	16	25	28	32	45	50	70	80	100
L16	2	2.5	3.5	4	2.5	5	2.5	2.5	5
L17	6	8	8	8	10	10	10	10	10
L18	43	52.5	55	60	60	70	90	105	120
L19	4.5	4.8	4.8	7.2	10	12	12	12	15
L20	10	12.5	12.5	19	28	36	36	36	42
L21	75.5	90	100	115	130	155	195	225	260
L22	95	120	135	155	180	215	270	310	370
B1 h9	5	5	6	6	10	12	14	16	18
B2 h9	5	5	6	6	10	12	14	16	18
H1	15	18	20.5	24.5	35	43	53.5	59	64
H2	15	18	20.5	24.5	35	43	53.5	59	64

ghv Vertriebs-GmbH | Am Schammacher Feld 47 | 85567 Grafing | Telefon + 49 80 92 81 89 0 | info@ghv.de | www.ghv.de

AT-H / ATB-H Series

Dimensions (1-stage, Ratio i=1~5)

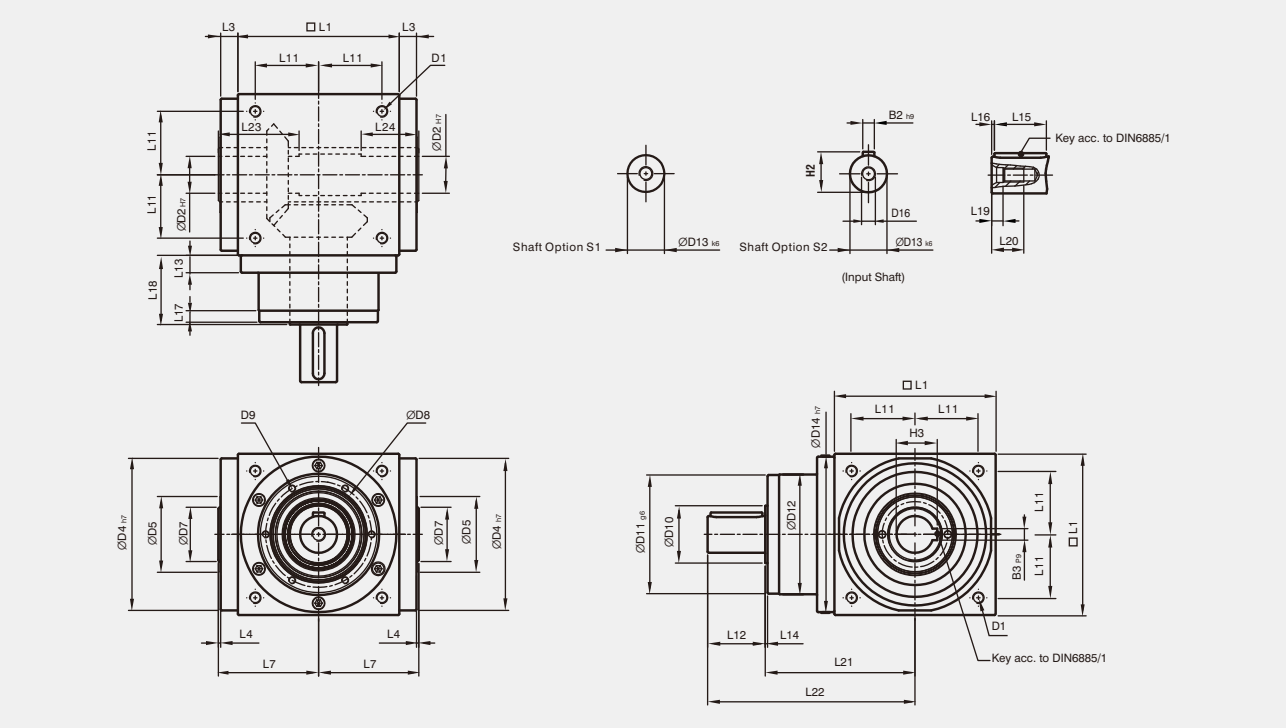

* The dimensions of ATB series are identical to AT series.

[unit: mm]

Dimension	AT065 H	AT075 H	AT090 H	AT110 H	AT140 H	AT170 H	AT210 H	AT240 H	AT280 H
D1	M4	M6	M6	M8	M10	M12	M16	M16	M16
D2 H7	13	14	18	22	32	40	50	55	60
D4 h7	63	73	88	108	135	165	205	235	275
D5	31	35	43	53	68	83	104	124	144
D7	21	22	28	33	47	55	75	85	110
D8	53	62	76	95	92	114	142	160	176
D9	4xM4xL7	4xM5xL8	4xM5xL8	6xM6xL10	6xM6xL10	6xM8xL12.5	6xM8xL12.5	6xM8xL12.5	6xM10xL15
D10	15.4	20.4	25.8	35.8	49.8	59.3	79.3	92.3	102.3
D11 g6	62.9	72.9	87	107	103	127	158	178	198
D12	62	72	86	106	104	128	160	180	200
D13 k6	13	16	18	22	32	40	50	55	60
D14 h7	63	73	88	108	135	165	205	235	275
D16	M4	M5	M5	M8	M12	M16	M16	M16	M20
L1	65	75	90	110	140	170	210	240	280
L3	13	14.5	15	15	15	15	20	25	25
L4	2	2	2	2	2	2	2	2	2
L7	47.5	54	62	72	87	102	127	147	167
L11	27	30	36	44	55	67	85	95	110
L12	19.5	30	35	40	50	60	75	85	110
L13	13	15	15	15	15	15	20	25	25
L14	2	2	2	2	2	2	2	2	2
L15	16	25	28	32	45	50	70	80	100
L16	2	2.5	3.5	4	2.5	5	2.5	2.5	5
L17	6	8	8	8	10	10	10	10	10
L18	43	52.5	55	60	60	70	90	105	120
L19	4.5	4.8	4.8	7.2	10	12	12	12	15
L20	10	12.5	12.5	19	28	36	36	36	42
L21	75.5	90	100	115	130	155	195	225	260
L22	95	120	135	155	180	215	270	310	370
L23	40	47	52	53	70	80	95	115	115
L24	30	32	35	35	50	55	65	80	80
B2 h9	5	5	6	6	10	12	14	16	18
B3 P9	5	5	6	6	10	12	14	16	18
H2	15	18	20.5	24.5	35	43	53.5	59	64
H3	15.3	16.3	20.8	24.8	35.3	43.3	53.8	59.3	64.4

ghv Vertriebs-GmbH | Am Schammacher Feld 47 | 85567 Grafing | Telefon + 49 80 92 81 89 0 | info@ghv.de | www.ghv.de

AT-C / ATB-C Series

Dimensions (1-stage, Ratio i=1~5)

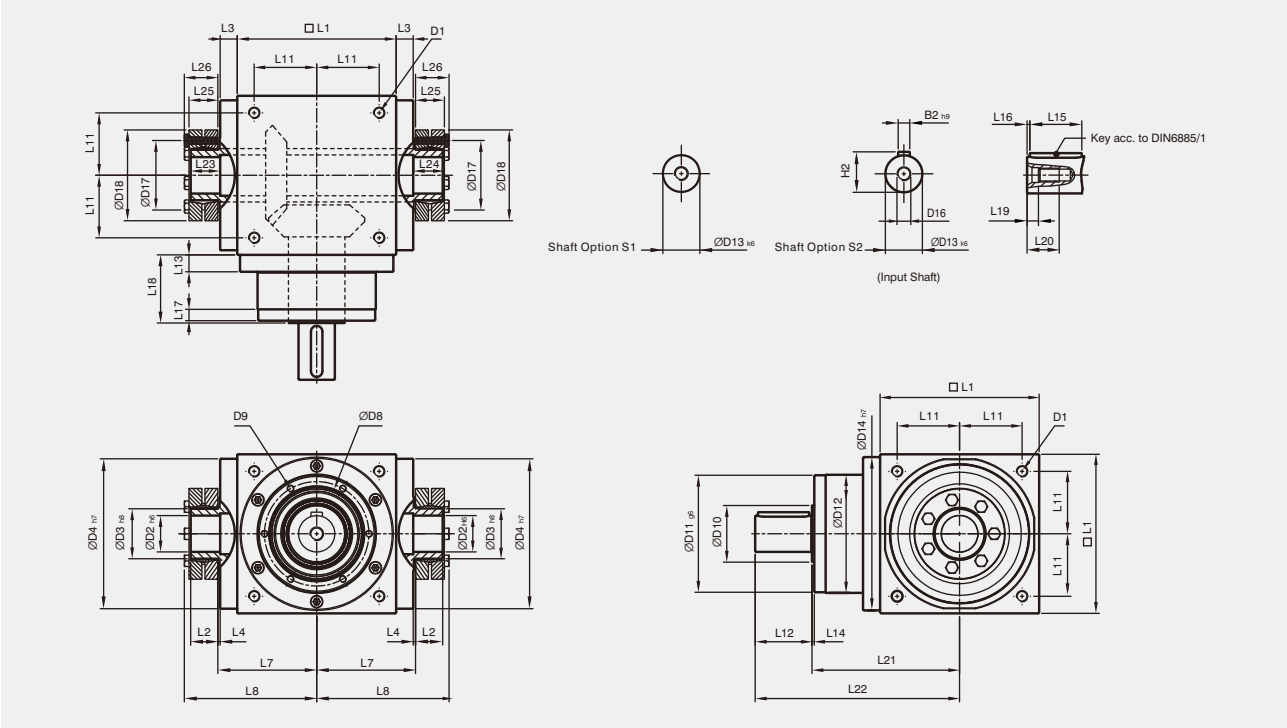

* The dimensions of ATB series are identical to AT series.

[unit: mm]

Dimension	AT065 C	AT075 C	AT090 C	AT110 C	AT140 C	AT170 C	AT210 C	AT240 C	AT280 C
D1	M4	M6	M6	M8	M10	M12	M16	M16	M16
D2 H6	13	14	18	22	32	40	50	55	60
D3 h8	16	16	22	25	44	50	62	68	75
D4 h7	63	73	88	108	135	165	205	235	275
D8	53	62	76	95	92	114	142	160	176
D9	4xM4xL7	4xM5xL8	4xM5xL8	6xM6xL10	6xM6xL10	6xM8xL12.5	6xM8xL12.5	6xM8xL12.5	6xM10xL15
D10	15.4	20.4	25.8	35.8	49.8	59.3	79.3	92.3	102.3
D11 g6	62.9	72.9	87	107	103	127	158	178	198
D12	62	72	86	106	104	128	160	180	200
D13 k6	13	16	18	22	32	40	50	55	60
D14 h7	63	73	88	108	135	165	205	235	275
D16	M4	M5	M5	M8	M12	M16	M16	M16	M20
D17	26	26	36	38	61	70	86	86	100
D18	41	41	50	50	80	90	110	115	138
L1	65	75	90	110	140	170	210	240	280
L2	14	14	18	18	24	26	29	29	30.5
L3	13	14.5	15	15	15	15	20	25	25
L4	2	2	2	2	2	2	2	2	2
L7	47.5	54	62	72	87	102	127	147	167
L8	66	72.5	85	95	116.5	133.5	161.5	181.5	205
L11	27	30	36	44	55	67	85	95	110
L12	19.5	30	35	40	50	60	75	85	110
L13	13	15	15	15	15	15	20	25	25
L14	2	2	2	2	2	2	2	2	2
L15	16	25	28	32	45	50	70	80	100
L16	2	2.5	3.5	4	2.5	5	2.5	2.5	5
L17	6	8	8	8	10	10	10	10	10
L18	43	52.5	55	60	60	70	90	105	120
L19	4.5	4.8	4.8	7.2	10	12	12	12	15
L20	10	12.5	12.5	19	28	36	36	36	42
L21	75.5	90	100	115	130	155	195	225	260
L22	95	120	135	155	180	215	270	310	370
L23	15	15	20	20	26	28	31	31	32.5
L24	15	15	20	20	26	28	31	31	32.5
L25	15	15	19.5	19.5	25.5	27.5	30.5	30.5	32.5
L26	18.5	18.5	23	23	29.5	31.5	34.5	34.5	38
B2 h9	5	5	6	6	10	12	14	16	18
H2	15	18	20.5	24.5	35	43	53.5	59	64

ghv Vertriebs-GmbH | Am Schammacher Feld 47 | 85567 Grafing | Telefon + 49 80 92 81 89 0 | info@ghv.de | www.ghv.de

AT-LM/RM / ATB-LM/RM Series

Dimensions (1-stage, Ratio i=1)

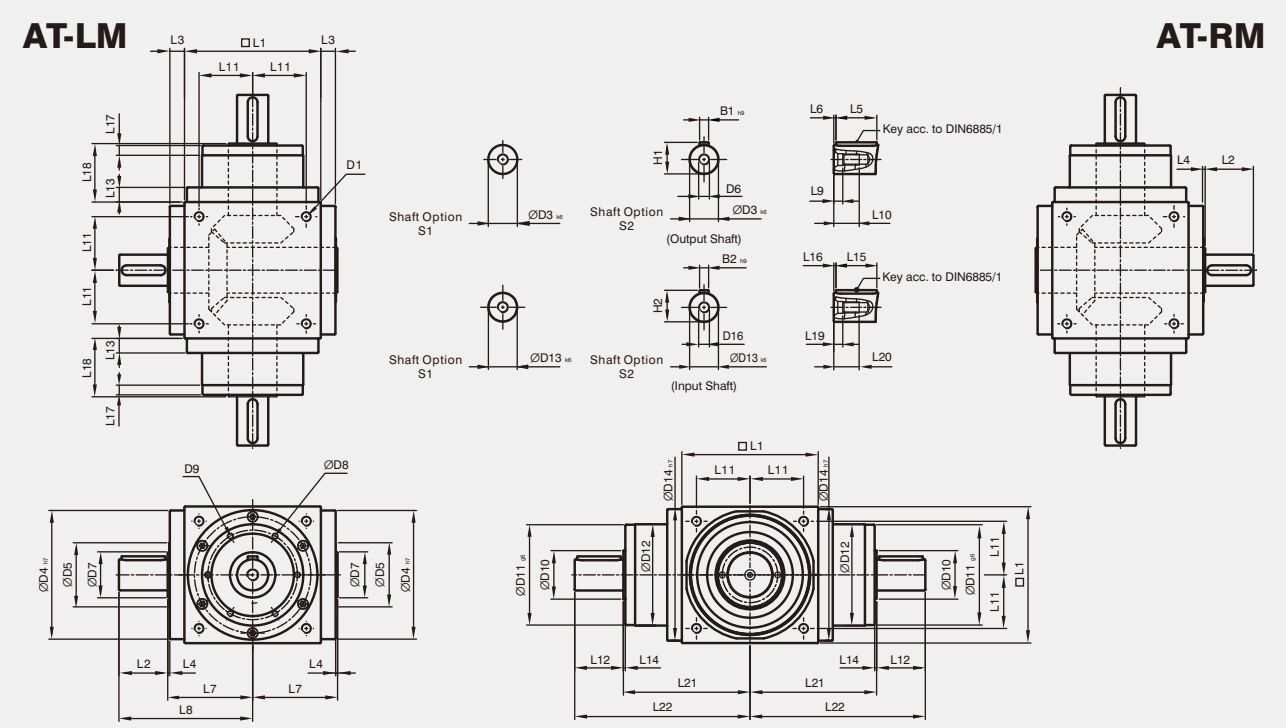

* The dimensions of ATB series are identical to AT series.

[unit: mm]

Dimension	AT065LM/RM	AT075LM/RM	AT090LM/RM	AT110LM/RM	AT140LM/RM	AT170LM/RM	AT210LM/RM	AT240LM/RM	AT280LM/RM
D1	M4	M6	M6	M8	M10	M12	M16	M16	M16
D3 k6	13	16	18	22	32	40	50	55	60
D4 h7	63	73	88	108	135	165	205	235	275
D5	31	35	43	53	68	83	104	124	144
D6	M4	M5	M5	M8	M12	M16	M16	M16	M20
D7	21	22	28	33	47	55	75	85	110
D8	53	62	76	95	92	114	142	160	176
D9	4xM4xL7	4xM5xL8	4xM5xL8	6xM6xL10	6xM6xL10	6xM8xL12.5	6xM8xL12.5	6xM8xL12.5	6xM10xL15
D10	15.4	20.4	25.8	35.8	49.8	59.3	79.3	92.3	102.3
D11 g6	62.9	72.9	87	107	103	127	158	178	198
D12	62	72	86	106	104	128	160	180	200
D13 k6	13	16	18	22	32	40	50	55	60
D14 h7	63	73	88	108	135	165	205	235	275
D16	M4	M5	M5	M8	M12	M16	M16	M16	M20
L1	65	75	90	110	140	170	210	240	280
L2	19.5	30	35	40	50	60	75	85	110
L3	13	14.5	15	15	15	15	20	25	25
L4	2	2	2	2	2	2	2	2	2
L5	16	25	28	32	45	50	70	80	100
L6	2	2.5	3.5	4	2.5	5	2.5	2.5	5
L7	47.5	54	62	72	87	102	127	147	167
L8	67	84	97	112	137	162	202	232	277
L9	4.5	4.8	4.8	7.2	10	12	12	12	15
L10	10	12.5	12.5	19	28	36	36	36	42
L11	27	30	36	44	55	67	85	95	110
L12	19.5	30	35	40	50	60	75	85	110
L13	13	15	15	15	15	15	20	25	25
L14	2	2	2	2	2	2	2	2	2
L15	16	25	28	32	45	50	70	80	100
L16	2	2.5	3.5	4	2.5	5	2.5	2.5	5
L17	6	8	8	8	10	10	10	10	10
L18	43	52.5	55	60	60	70	90	105	120
L19	4.5	4.8	4.8	7.2	10	12	12	12	15
L20	10	12.5	12.5	19	28	36	36	36	42
L21	75.5	90	100	115	130	155	195	225	260
L22	95	120	135	155	180	215	270	310	370
B1 h9	5	5	6	6	10	12	14	16	18
B2 h9	5	5	6	6	10	12	14	16	18
H1	15	18	20.5	24.5	35	43	53.5	59	64
H2	15	18	20.5	24.5	35	43	53.5	59	64

ghv Vertriebs-GmbH | Am Schammacher Feld 47 | 85567 Grafing | Telefon + 49 80 92 81 89 0 | info@ghv.de | www.ghv.de

AT-4M / ATB-4M Series

Dimensions (1-stage, Ratio i=1)

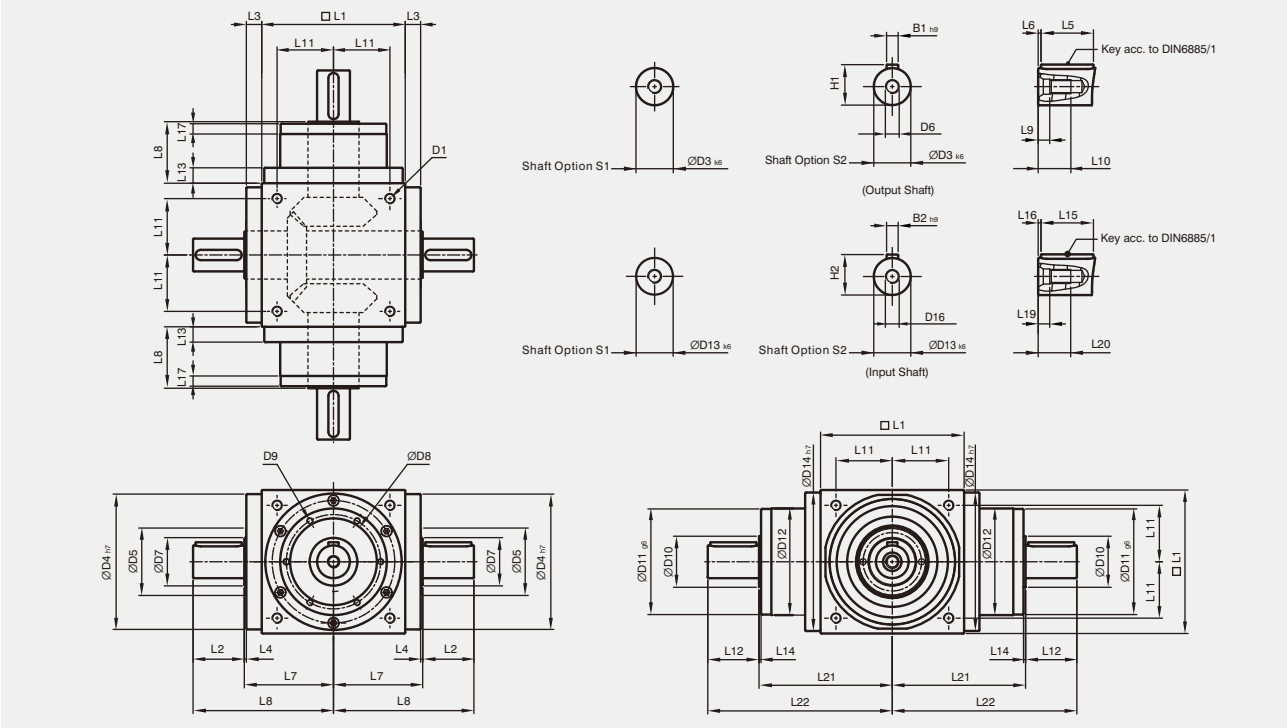

* The dimensions of ATB series are identical to AT series.

[unit: mm]

Dimension	AT065 4M	AT075 4M	AT090 4M	AT110 4M	AT140 4M	AT170 4M	AT210 4M	AT240 4M	AT280 4M
D1	M4	M6	M6	M8	M10	M12	M16	M16	M16
D3 k6	13	16	18	22	32	40	50	55	60
D4 h7	63	73	88	108	135	165	205	235	275
D5	31	35	43	53	68	83	104	124	144
D6	M4	M5	M5	M8	M12	M16	M16	M16	M20
D7	21	22	28	33	47	55	75	85	110
D8	53	62	76	95	92	114	142	160	176
D9	4xM4xL7	4xM5xL8	4xM5xL8	6xM6xL10	6xM6xL10	6xM8xL12.5	6xM8xL12.5	6xM8xL12.5	6xM10xL15
D10	15.4	20.4	25.8	35.8	49.8	59.3	79.3	92.3	102.3
D11 g6	62.9	72.9	87	107	103	127	158	178	198
D12	62	72	86	106	104	128	160	180	200
D13 k6	13	16	18	22	32	40	50	55	60
D14 h7	63	73	88	108	135	165	205	235	275
D16	M4	M5	M5	M8	M12	M16	M16	M16	M20
L1	65	75	90	110	140	170	210	240	280
L2	19.5	30	35	40	50	60	75	85	110
L3	13	14.5	15	15	15	15	20	25	25
L4	2	2	2	2	2	2	2	2	2
L5	16	25	28	32	45	50	70	80	100
L6	2	2.5	3.5	4	2.5	5	2.5	2.5	5
L7	47.5	54	62	72	87	102	127	147	167
L8	67	84	97	112	137	162	202	232	277
L9	4.5	4.8	4.8	7.2	10	12	12	12	15
L10	10	12.5	12.5	19	28	36	36	36	42
L11	27	30	36	44	55	67	85	95	110
L12	19.5	30	35	40	50	60	75	85	110
L13	13	15	15	15	15	15	20	25	25
L14	2	2	2	2	2	2	2	2	2
L15	16	25	28	32	45	50	70	80	100
L16	2	2.5	3.5	4	2.5	5	2.5	2.5	5
L17	6	8	8	8	10	10	10	10	10
L18	43	52.5	55	60	60	70	90	105	120
L19	4.5	4.8	4.8	7.2	10	12	12	12	15
L20	10	12.5	12.5	19	28	36	36	36	42
L21	75.5	90	100	115	130	155	195	225	260
L22	95	120	135	155	180	215	270	310	370
B1 h9	5	5	6	6	10	12	14	16	18
B2 h9	5	5	6	6	10	12	14	16	18
H1	15	18	20.5	24.5	35	43	53.5	59	64
H2	15	18	20.5	24.5	35	43	53.5	59	64

ghv Vertriebs-GmbH | Am Schammacher Feld 47 | 85567 Grafing | Telefon + 49 80 92 81 89 0 | info@ghv.de | www.ghv.de

Gearbox Performance

(The performance and specification of ATB series are identical to AT series.)

Model No.		Stage	Ratio[A]	AT065 FL AT065 FL1 AT065 FH AT065 FC AT065 FR1	AT075 FL AT075 FL1 AT075 FH AT075 FC AT075 FR1	AT090 FL AT090 FL1 AT090 FH AT090 FC AT090 FR1	AT110 FL AT110 FL1 AT110 FH AT110 FC AT110 FR1	AT140 FL AT140 FL1 AT140 FH AT140 FC AT140 FR1	AT170 FL AT170 FL1 AT170 FH AT170 FC AT170 FR1	AT210 FL AT210 FL1 AT210 FH AT210 FC AT210 FR1	AT240 FL AT240 FL1 AT240 FH AT240 FC AT240 FR1	AT280 FL AT280 FL1 AT280 FH AT280 FC AT280 FR1
Nominal Output Torque T_{2N}	Nm	1	1	25	45	78	150	360	585	1,300	2,150	3,200
			1.5	25	45	78	150	360	585	1,300	2,150	3,200
			2	24	42	68	150	330	544	1,220	2,010	3,050
			3	18	33	54	120	270	450	1,020	1,650	2,850
			4	13	28	48	100	224	376	860	1,410	2,300
			5	12	25	40	85	196	320	740	1,210	2,000
		2	7	12	12	33	91	91	91	195	358	358
			10	24	28	68	150	208	208	430	846	846
			15	18	33	54	120	270	312	645	1,269	1,269
			20	13	28	48	100	224	376	860	1,410	1,692
			25	12	25	40	85	196	320	740	1,210	2,000
			35	12	25	40	85	196	320	740	1,210	1,790
			50	12	25	40	85	196	320	740	1,210	1,465
		3	75	-	-	-	120	210	312	585	1,269	1,269
			100	-	-	-	100	224	376	780	1,410	1,692
			125	-	-	-	85	196	320	740	1,210	2,000
			150	-	-	-	120	135	312	390	975	975
			200	-	-	-	100	180	376	520	1,300	1,300
			250	-	-	-	85	196	320	650	1,210	1,625
			350	-	-	-	85	196	320	740	1,210	1,790
			500	-	-	-	85	196	320	740	1,210	1,465
Max. Acceleration Torque T_{2B}	Nm	1,2,3	1~500	1.5 times of Nominal Output Torque								
Max. Acceleration Input Speed n_{1B}	rpm	1	1~5	7,500	6,500	5,500	4,500	3,500	3,000	2,200	2,000	1,700
		2	7~50	8,000	8,000	6,000	6,000	6,000	6,000	4,800	3,600	3,600
		3	75~500	-	-	-	8,000	8,000	6,000	6,000	6,000	6,000
Standard Backlash[B]	arcmin	1	1~5	≤6	≤6	≤6	≤6	≤6	≤6	≤6	≤6	≤6
		2	7~50	≤8	≤8	≤8	≤8	≤8	≤8	≤8	≤8	≤8
		3	75~500	-	-	-	≤10	≤10	≤10	≤10	≤10	≤10
Max. Radial Load F_{2rB}[C] Output d2	N	1,2,3	1~500	900	1,100	1,700	2,700	4,800	6,600	11,500	16,000	18,000
Max. Axial Load F_{2aB}[C] Output d2	N	1,2,3	1~500	450	550	850	1,350	2,400	3,300	5,750	8,500	9,000
Service Life[D]	hr	1,2,3	1~500	20,000								
Efficiency η	%	1	1~5	≥98%								
		2,3	7~500	≥94%								
Operating Temp	°C	1,2,3	1~500	-10°C ~ 90°C								
Lubrication				Synthetic lubrication oils								
Noise Level (n_1=1500rpm, No Load)	dB (A)	1,2,3	1~500	≤71	≤72	≤76	≤77	≤78	≤79	≤81	≤83	≤84

ghv Vertriebs-GmbH | Am Schammacher Feld 47 | 85567 Grafing | Telefon + 49 80 92 81 89 0 | info@ghv.de | www.ghv.de

Gearbox Inertia (The performance and specification of ATB series are identical to AT series.)

Model No.		Stage	Ratio[A]	AT065 FL AT065 FL1 AT065 FH AT065 FC AT065 FR1	AT075 FL AT075 FL1 AT075 FH AT075 FC AT075 FR1	AT090 FL AT090 FL1 AT090 FH AT090 FC AT090 FR1	AT110 FL AT110 FL1 AT110 FH AT110 FC AT110 FR1	AT140 FL AT140 FL1 AT140 FH AT140 FC AT140 FR1	AT170 FL AT170 FL1 AT170 FH AT170 FC AT170 FR1	AT210 FL AT210 FL1 AT210 FH AT210 FC AT210 FR1	AT240 FL AT240 FL1 AT240 FH AT240 FC AT240 FR1	AT280 FL AT280 FL1 AT280 FH AT280 FC AT280 FR1
Mass Moments of Inertia J_1	kg・cm^2	1	1	0.51	1.30	3.14	7.62	23.54	59.09	195.96	365.38	787.63
			1.5	0.46	1.15	2.80	6.65	19.34	49.38	156.02	279.62	584.28
			2	0.44	1.10	2.68	6.23	17.72	45.44	140.80	245.78	500.26
			3	0.43	1.09	2.64	6.08	17.16	44.11	135.51	233.75	471.56
			4	0.43	1.08	2.63	6.05	17.03	43.79	134.14	230.77	464.76
			5	0.43	1.08	2.63	6.04	16.99	43.69	133.71	229.71	462.08
		2	7	0.15	0.15	0.50	2.79	2.79	2.79	9.91	29.26	29.26
			10	0.15	0.15	0.50	2.80	2.80	2.80	9.96	29.43	29.43
			15	0.15	0.15	0.50	2.80	2.80	2.80	9.96	29.43	29.43
			20	0.15	0.15	0.50	2.80	2.80	2.80	9.96	29.43	29.43
			25	0.15	0.15	0.50	2.80	2.80	2.80	9.96	29.43	29.43
			35	0.15	0.15	0.50	2.79	2.79	2.79	9.91	29.26	29.26
			50	0.15	0.15	0.50	2.79	2.79	2.79	9.89	29.20	29.20
		3	75	-	-	-	2.80	2.80	2.80	9.96	29.43	29.43
			100	-	-	-	2.80	2.80	2.80	9.96	29.43	29.43
			125	-	-	-	2.80	2.80	2.80	9.96	29.43	29.43
			150	-	-	-	2.79	2.79	2.79	9.89	29.20	29.20
			200	-	-	-	2.79	2.79	2.79	9.89	29.20	29.20
			250	-	-	-	2.79	2.79	2.79	9.89	29.20	29.20
			350	-	-	-	2.79	2.79	2.79	9.89	29.20	29.20
			500	-	-	-	2.79	2.79	2.79	9.89	29.20	29.20

Weight

Model No.		Stage	Ratio[A]	AT065	AT075	AT090	AT110	AT140	AT170	AT210	AT240	AT280
FL Series	kg	1	1~5	2.8	4.4	7.1	12.1	20.9	36.1	69.4	101.2	158.3
		2	7~50	3.2	4.8	8.1	14.3	24.2	38.5	74.1	112.4	171.0
		3	75~500	-	-	-	13.9	23.7	38.8	73.4	110.2	168.7
FL1 Series		1	1~5	2.7	4.3	7.1	11.9	20.3	35.5	68.3	99.6	156.0
		2	7~50	3.2	4.8	8.0	14.2	23.9	37.9	73.0	110.8	168.6
		3	75~500	-	-	-	13.8	23.4	38.2	72.3	108.6	166.4
FH Series		1	1~5	2.6	4.1	6.7	11.4	18.9	32.9	63.2	92.5	146.0
		2	7~50	3.1	4.6	7.7	13.6	22.4	35.3	67.9	103.7	158.7
		3	75~500	-	-	-	13.3	21.9	35.6	67.2	101.5	156.5
FC Series		1	1~5	2.9	4.4	7.2	11.8	20.4	35.0	66.5	96.0	151.7
		2	7~50	3.3	4.9	8.2	14.1	24.1	37.4	71.2	107.2	164.4
		3	75~500	-	-	-	13.7	23.5	37.5	70.5	105.0	162.2
FR1 Series		1	1~5	2.7	4.3	7.1	11.9	20.3	35.5	68.3	99.6	156.0
		2	7~50	3.2	4.8	8.0	14.2	23.9	37.9	73.0	110.8	168.6
		3	75~500	-	-	-	13.8	23.4	38.2	72.3	108.6	166.4

A. Ratio ($i = N_{in} / N_{out}$)
B. Backlash is measured at 2% Nominal Torque T_{2N}.
C. Apply to the input shaft center at n_{1B}.
D. S1 service life 10,000 hrs.

AT-FL / ATB-FL Series

Dimensions (1-stage, Ratio i=1~5)

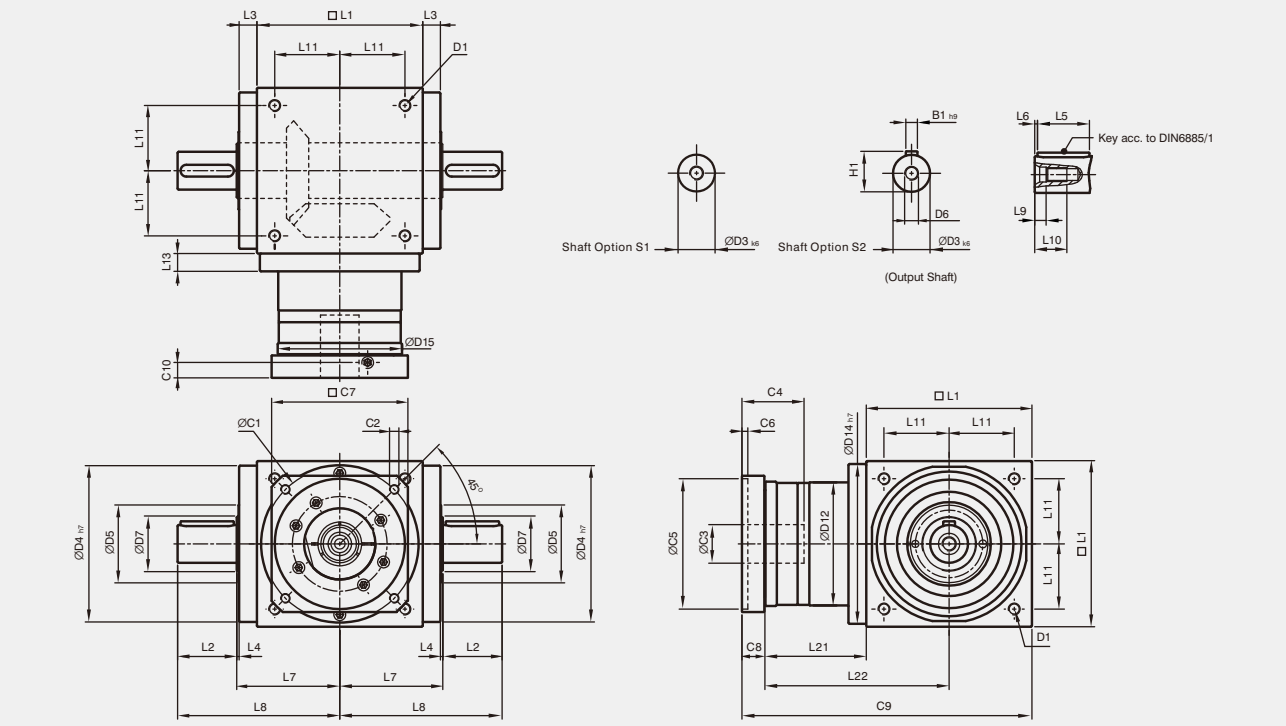

* The dimensions of ATB series are identical to AT series.

[unit: mm]

Dimension	AT065 FL	AT075 FL	AT090 FL	AT110 FL	AT140 FL	AT170 FL	AT210 FL	AT240 FL	AT280 FL
D1	M4	M6	M6	M8	M10	M12	M16	M16	M16
D3 k6	13	16	18	22	32	40	50	55	60
D4 h7	63	73	88	108	135	165	205	235	275
D5	31	35	43	53	68	83	104	124	144
D6	M4	M5	M5	M8	M12	M16	M16	M16	M20
D7	21	22	28	33	47	55	75	85	110
D12	62	72	86	106	104	128	160	180	200
D14 h7	63	73	88	108	135	165	205	235	275
D15	62.9	72.9	87	107	105	127	158	178	198
L1	65	75	90	110	140	170	210	240	280
L2	19.5	30	35	40	50	60	75	85	110
L3	13	14.5	15	15	15	15	20	25	25
L4	2	2	2	2	2	2	2	2	2
L5	16	25	28	32	45	50	70	80	100
L6	2	2.5	3.5	4	2.5	5	2.5	2.5	5
L7	47.5	54	62	72	87	102	127	147	167
L8	67	84	97	112	137	162	202	232	277
L9	4.5	4.8	4.8	7.2	10	12	12	12	15
L10	10	12.5	12.5	19	28	36	36	36	42
L11	27	30	36	44	55	67	85	95	110
L13	13	15	15	15	15	15	20	25	25
L21	49	60.5	63	69.5	85.5	95	130	144.5	135
L22	81.5	98	108	124.5	155.5	180	235	264.5	275
C1[1]	46	70	100	100	130	165	215	215	235
C2[1]	M4	M5	M6	M6	M8	M10	M12	M12	M12
C3[1]	≤11 / ≤12[2]	≤14 / ≤15.875 / ≤16[2]	≤19	≤24	≤32	≤38	≤42	≤48	≤55
C4[1]	30	34	40	40	50	60	85	85	116
C5[1]	30	50	80	80	110	130	180	180	200
C6[1]	3.5	8	4	4	5	6	6	6	6
C7[1]	42	60	90	90	115	142	190	190	220
C8[1]	19.5	19	17	17	19.5	22.5	29	29	63
C9[1]	133.5	154.5	170	196.5	245	287.5	369	413.5	478
C10[1]	13.25	13.5	10.75	10.75	13	15	20.75	20.75	53.5
B1 h9	5	5	6	6	10	12	14	16	18
H1	15	18	20.5	24.5	35	43	53.5	59	64

1. C1~C10 are motor specific dimensions (metric std shown). Refer to www.apexdyna.com and design Tool to view your specific motor mounting system.
2. AT065 FLM1 offers C3 ≤12 option; AT075 FLM1 offers C3 ≤16 option; AT075 FLM2 offers C3 ≤15.875 option.

ghv Vertriebs-GmbH | Am Schammacher Feld 47 | 85567 Grafing | Telefon + 49 80 92 81 89 0 | info@ghv.de | www.ghv.de

AT-FL / ATB-FL Series

Dimensions (2-stage, Ratio i=7~50)

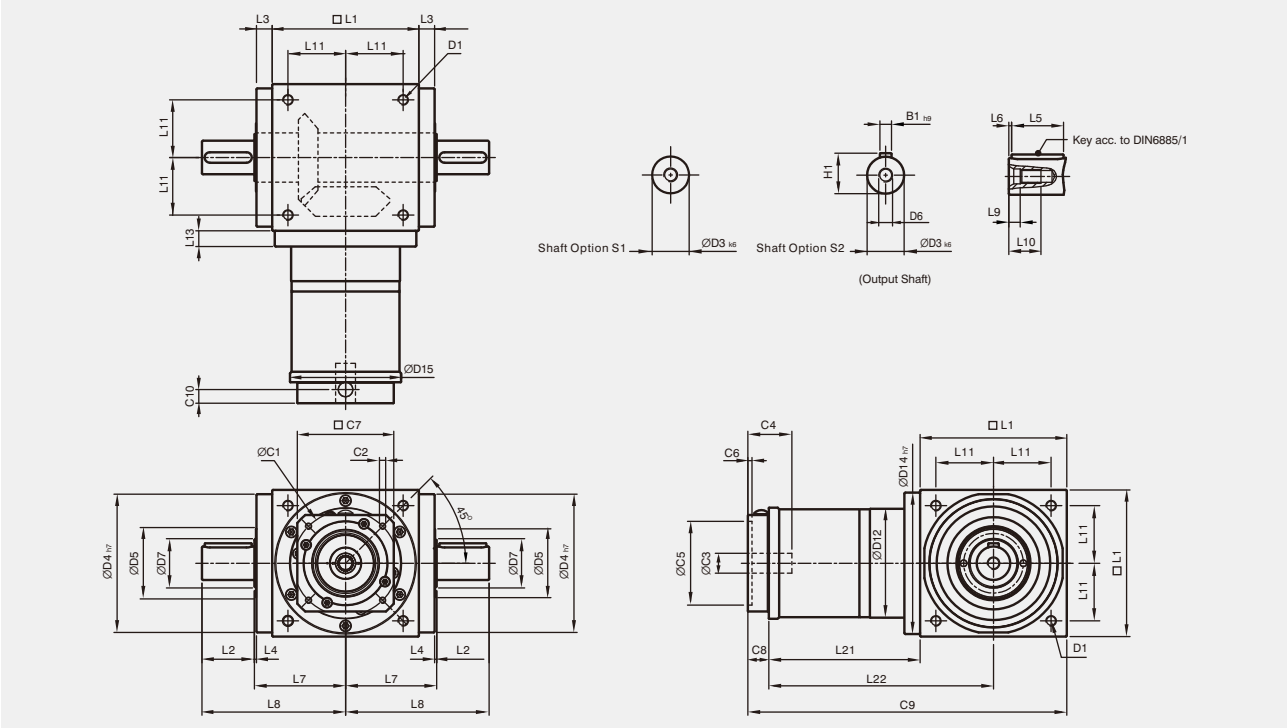

* The dimensions of ATB series are identical to AT series.

[unit: mm]

Dimension	AT065 FL	AT075 FL	AT090 FL	AT110 FL	AT140 FL	AT170 FL	AT210 FL	AT240 FL	AT280 FL
D1	M4	M6	M6	M8	M10	M12	M16	M16	M16
D3 k6	13	16	18	22	32	40	50	55	60
D4 h7	63	73	88	108	135	165	205	235	275
D5	31	35	43	53	68	83	104	124	144
D6	M4	M5	M5	M8	M12	M16	M16	M16	M20
D7	21	22	28	33	47	55	75	85	110
D12	62	72	86	106	104	128	160	180	200
D14 h7	63	73	88	108	135	165	205	235	275
D15	62.9	72.9	87	107	106	127	158	178	198
L1	65	75	90	110	140	170	210	240	280
L2	19.5	30	35	40	50	60	75	85	110
L3	13	14.5	15	15	15	15	20	25	25
L4	2	2	2	2	2	2	2	2	2
L5	16	25	28	32	45	50	70	80	100
L6	2	2.5	3.5	4	2.5	5	2.5	2.5	5
L7	47.5	54	62	72	87	102	127	147	167
L8	67	84	97	112	137	162	202	232	277
L9	4.5	4.8	4.8	7.2	10	12	12	12	15
L10	10	12.5	12.5	19	28	36	36	36	42
L11	27	30	36	44	55	67	85	95	110
L13	13	15	15	15	15	15	20	25	25
L21	75	84.5	99	122	144.5	157.5	206.5	239	248
L22	107.5	122	144	177	214.5	242.5	311.5	359	388
C1[3]	46	46	70	100	100	100	130	165	165
C2[3]	M4	M4	M5	M6	M6	M6	M8	M10	M10
C3[3]	≤12	≤12	≤16	≤24	≤24	≤24	≤32	≤38	≤38
C4[3]	30	30	34	40	40	40	50	60	60
C5[3]	30	30	50	80	80	80	110	130	130
C6[3]	3.5	3.5	8	4	4	4	5	6	6
C7[3]	42	42	60	92	92	92	115	142	142
C8[3]	21.5	21.5	21.5	20	20	20	24	31	31
C9[3]	161.5	181	210.5	252	304.5	347.5	440.5	510	559
C10[3]	14.5	14.5	15.5	13	13	13	16	21	21
B1 h9	5	5	6	6	10	12	14	16	18
H1	15	18	20.5	24.5	35	43	53.5	59	64

3. C1~C10 are motor specific dimensions (metric std shown). Refer to Apexdyna.com and Design Tool to view your specific motor mounting system.

ghv Vertriebs-GmbH | Am Schammacher Feld 47 | 85567 Grafing | Telefon + 49 80 92 81 89 0 | info@ghv.de | www.ghv.de

AT-FL / ATB-FL Series

Dimensions (3-stage, Ratio i=75~500)

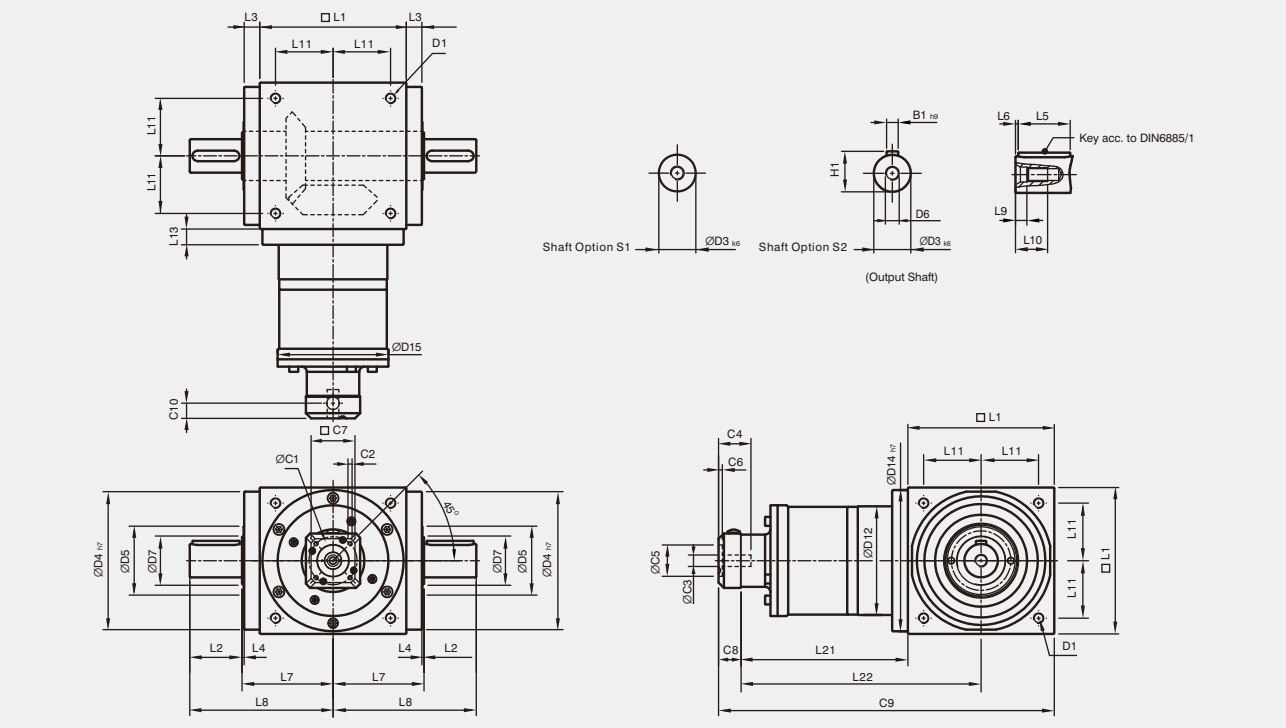

* The dimensions of ATB series are identical to AT series.

[unit: mm]

Dimension	AT110 FL	AT140 FL	AT170 FL	AT210 FL	AT240 FL	AT280 FL
D1	M8	M10	M12	M16	M16	M16
D3 k6	22	32	40	50	55	60
D4 h7	108	135	165	205	235	275
D5	53	68	83	104	124	144
D6	M8	M12	M16	M16	M16	M20
D7	33	47	55	75	85	110
D12	106	104	128	160	180	200
D14 h7	108	135	165	205	235	275
D15	107	106	127	158	178	198
L1	110	140	170	210	240	280
L2	40	50	60	75	85	110
L3	15	15	15	20	25	25
L4	2	2	2	2	2	2
L5	32	45	50	70	80	100
L6	4	2.5	5	2.5	2.5	5
L7	72	87	102	127	147	167
L8	112	137	162	202	232	277
L9	7.2	10	12	12	12	15
L10	19	28	36	36	36	42
L11	44	55	67	85	95	110
L13	15	15	15	20	25	25
L21	136.5	159.5	183.5	226	269	278
L22	191.5	229.5	268.5	331	389	418
C1[4]	46	46	70	70	100	100
C2[4]	M4	M4	M5	M5	M6	M6
C3[4]	≤12	≤12	≤16	≤16	≤24	≤24
C4[4]	30	30	34	34	40	40
C5[4]	30	30	50	50	80	80
C6[4]	3.5	3.5	8	8	4	4
C7[4]	42	42	60	60	92	92
C8[4]	21.5	21.5	21.5	21.5	20	20
C9[4]	268	321	375	457.5	529	578
C10[4]	14.5	14.5	15.5	15.5	13	13
B1 h9	6	10	12	14	16	18
H1	24.5	35	43	53.5	59	64

4. C1~C10 are motor specific dimensions (metric std shown). Refer to Apexdyna.com and Design Tool to view your specific motor mounting system.

ghv Vertriebs-GmbH | Am Schammacher Feld 47 | 85567 Grafing | Telefon + 49 80 92 81 89 0 | info@ghv.de | www.ghv.de

AT-FL1/FR1 / ATB-FL1/FR1 Series

Dimensions (1-stage, Ratio i=1~5)

AT-FL1 / ATB-FL1

AT-FR1 / ATB-FR1

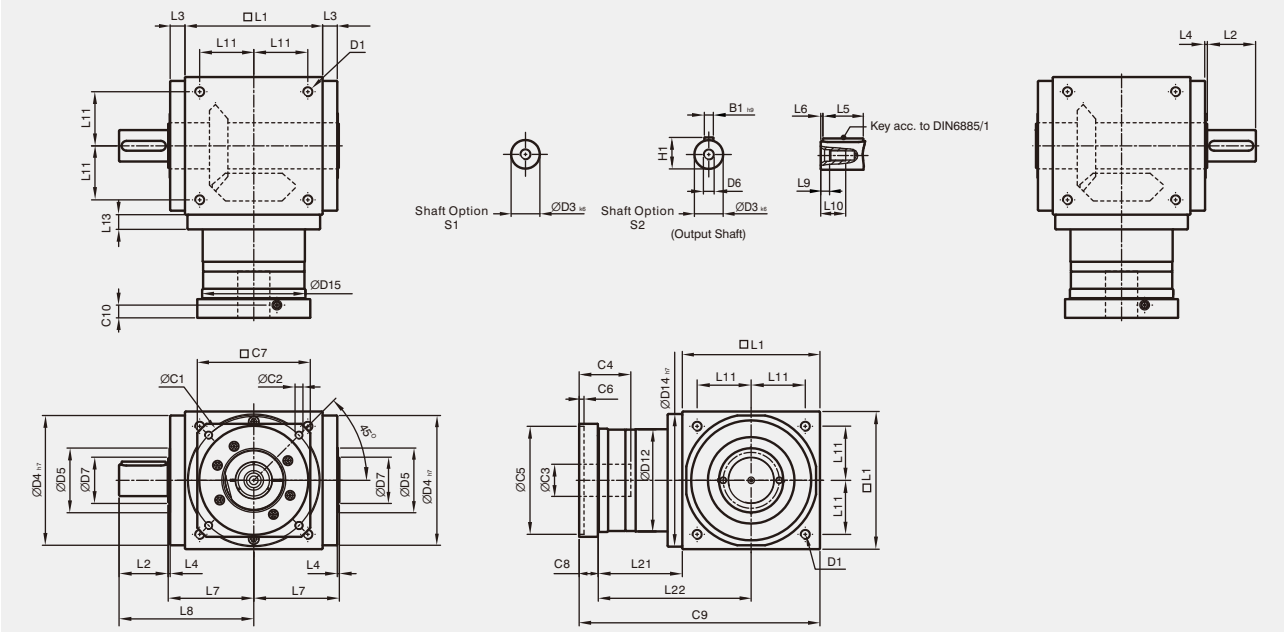

* The dimensions of ATB series are identical to AT series.

[unit: mm]

Dimension	AT065 FL1/FR1	AT075 FL1/FR1	AT090 FL1/FR1	AT110 FL1/FR1	AT140 FL1/FR1	AT170 FL1/FR1	AT210 FL1/FR1	AT240 FL1/FR1	AT280 FL1/FR1
D1	M4	M6	M6	M8	M10	M12	M16	M16	M16
D3 k6	13	16	18	22	32	40	50	55	60
D4 h7	63	73	88	108	135	165	205	235	275
D5	31	35	43	53	68	83	104	124	144
D6	M4	M5	M5	M8	M12	M16	M16	M16	M20
D7	21	22	28	33	47	55	75	85	110
D12	62	72	86	106	104	128	160	180	200
D14 h7	63	73	88	108	135	165	205	235	275
D15	62.9	72.9	87	107	105	127	158	178	198
L1	65	75	90	110	140	170	210	240	280
L2	19.5	30	35	40	50	60	75	85	110
L3	13	14.5	15	15	15	15	20	25	25
L4	2	2	2	2	2	2	2	2	2
L5	16	25	28	32	45	50	70	80	100
L6	2	2.5	3.5	4	2.5	5	2.5	2.5	5
L7	47.5	54	62	72	87	102	127	147	167
L8	67	84	97	112	137	162	202	232	277
L9	4.5	4.8	4.8	7.2	10	12	12	12	15
L10	10	12.5	12.5	19	28	36	36	36	42
L11	27	30	36	44	55	67	85	95	110
L13	13	15	15	15	15	15	20	25	25
L21	49	60.5	63	69.5	85.5	95	130	144.5	135
L22	81.5	98	108	124.5	155.5	180	235	264.5	275
C1[5]	46	70	100	100	130	165	215	215	235
C2[5]	M4	M5	M6	M6	M8	M10	M12	M12	M12
C3[5]	≤11 / ≤12[6]	≤14 / ≤15.875 / ≤16[6]	≤19	≤24	≤32	≤38	≤42	≤48	≤55
C4[5]	30	34	40	40	50	60	85	85	116
C5[5]	30	50	80	80	110	130	180	180	200
C6[5]	3.5	8	4	4	5	6	6	6	6
C7[5]	42	60	90	90	115	142	190	190	220
C8[5]	19.5	19	17	17	19.5	22.5	29	29	63
C9[5]	133.5	154.5	170	196.5	245	287.5	369	413.5	478
C10[5]	13.25	13.5	10.75	10.75	13	15	20.75	20.75	53.5
B1 h9	5	5	6	6	10	12	14	16	18
H1	15	18	20.5	24.5	35	43	53.5	59	64

5. C1~C10 are motor specific dimensions (metric std shown). Refer to Apexdyna.com and Design Tool to view your specific motor mounting system.
6. AT065 FL1/FR1M1 offers C3 ≤12 option; AT075 FL1/FR1M1 offers C3 ≤16 option; AT075 FL1/FR1M2 offers C3 ≤15.875 option.

ghv Vertriebs-GmbH | Am Schammacher Feld 47 | 85567 Grafing | Telefon + 49 80 92 81 89 0 | info@ghv.de | www.ghv.de

AT-FL1/FR1 / ATB-FL1/FR1 Series

Dimensions (2-stage, Ratio i=7~50)

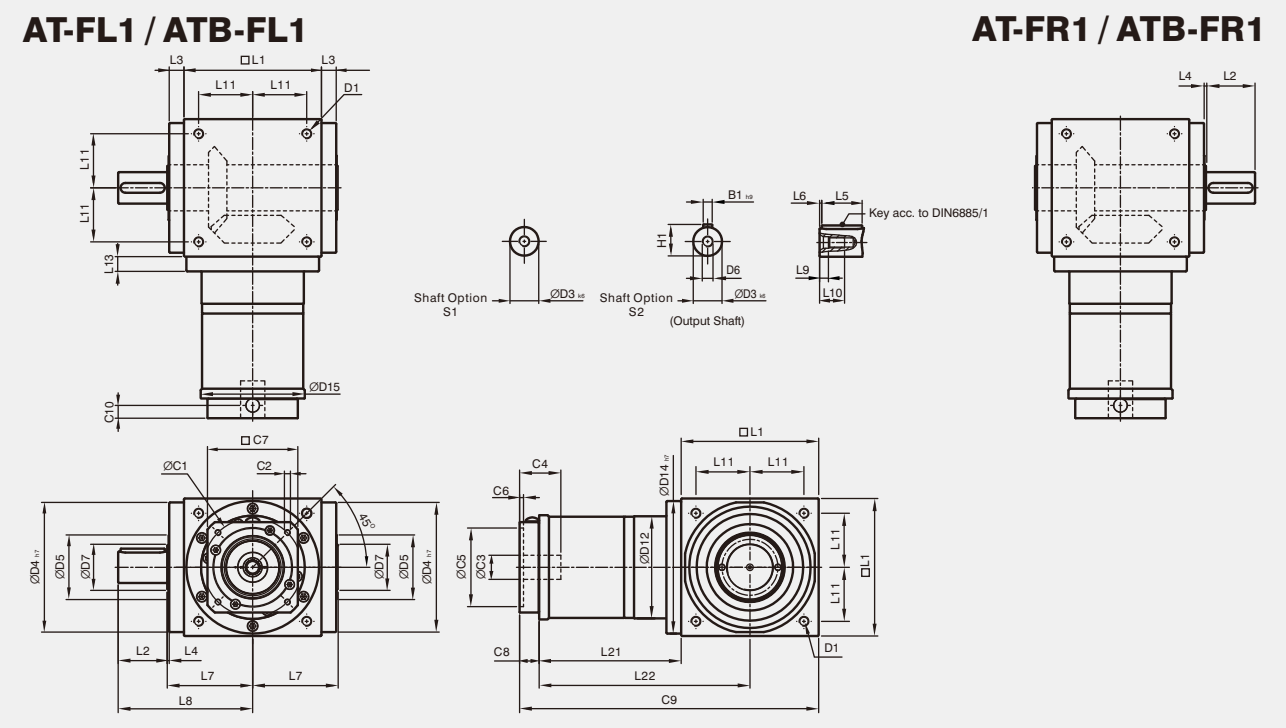

* The dimensions of ATB series are identical to AT series.

[unit: mm]

Dimension	AT065 FL1/FR1	AT075 FL1/FR1	AT090 FL1/FR1	AT110 FL1/FR1	AT140 FL1/FR1	AT170 FL1/FR1	AT210 FL1/FR1	AT240 FL1/FR1	AT280 FL1/FR1
D1	M4	M6	M6	M8	M10	M12	M16	M16	M16
D3 k6	13	16	18	22	32	40	50	55	60
D4 h7	63	73	88	108	135	165	205	235	275
D5	31	35	43	53	68	83	104	124	144
D6	M4	M5	M5	M8	M12	M16	M16	M16	M20
D7	21	22	28	33	47	55	75	85	110
D12	62	72	86	106	104	128	160	180	200
D14 h7	63	73	88	108	135	165	205	235	275
D15	62.9	72.9	87	107	106	127	158	178	198
L1	65	75	90	110	140	170	210	240	280
L2	19.5	30	35	40	50	60	75	85	110
L3	13	14.5	15	15	15	15	20	25	25
L4	2	2	2	2	2	2	2	2	2
L5	16	25	28	32	45	50	70	80	100
L6	2	2.5	3.5	4	2.5	5	2.5	2.5	5
L7	47.5	54	62	72	87	102	127	147	167
L8	67	84	97	112	137	162	202	232	277
L9	4.5	4.8	4.8	7.2	10	12	12	12	15
L10	10	12.5	12.5	19	28	36	36	36	42
L11	27	30	36	44	55	67	85	95	110
L13	13	15	15	15	15	15	20	25	25
L21	75	84.5	99	122	144.5	157.5	206.5	239	248
L22	107.5	122	144	177	214.5	242.5	311.5	359	388
C1[7]	46	46	70	100	100	100	130	165	165
C2[7]	M4	M4	M5	M6	M6	M6	M8	M10	M10
C3[7]	≤12	≤12	≤16	≤24	≤24	≤24	≤32	≤38	≤38
C4[7]	30	30	34	40	40	40	50	60	60
C5[7]	30	30	50	80	80	80	110	130	130
C6[7]	3.5	3.5	8	4	4	4	5	6	6
C7[7]	42	42	60	92	92	92	115	142	142
C8[7]	21.5	21.5	21.5	20	20	20	24	31	31
C9[7]	161.5	181	210.5	252	304.5	347.5	440.5	510	559
C10[7]	14.55	14.5	15.5	13	13	13	16	21	21
B1 h9	5	5	6	6	10	12	14	16	18
H1	15	18	20.5	24.5	35	43	53.5	59	64

7. C1~C10 are motor specific dimensions (metric std shown). Refer to www.apexdyna.com and design Tool to view your specific motor mounting system.

ghv Vertriebs-GmbH | Am Schammacher Feld 47 | 85567 Grafing | Telefon + 49 80 92 81 89 0 | info@ghv.de | www.ghv.de

AT-FL1/FR1 / ATB-FL1/FR1 Series

Dimensions (3-stage, Ratio i=75~500)

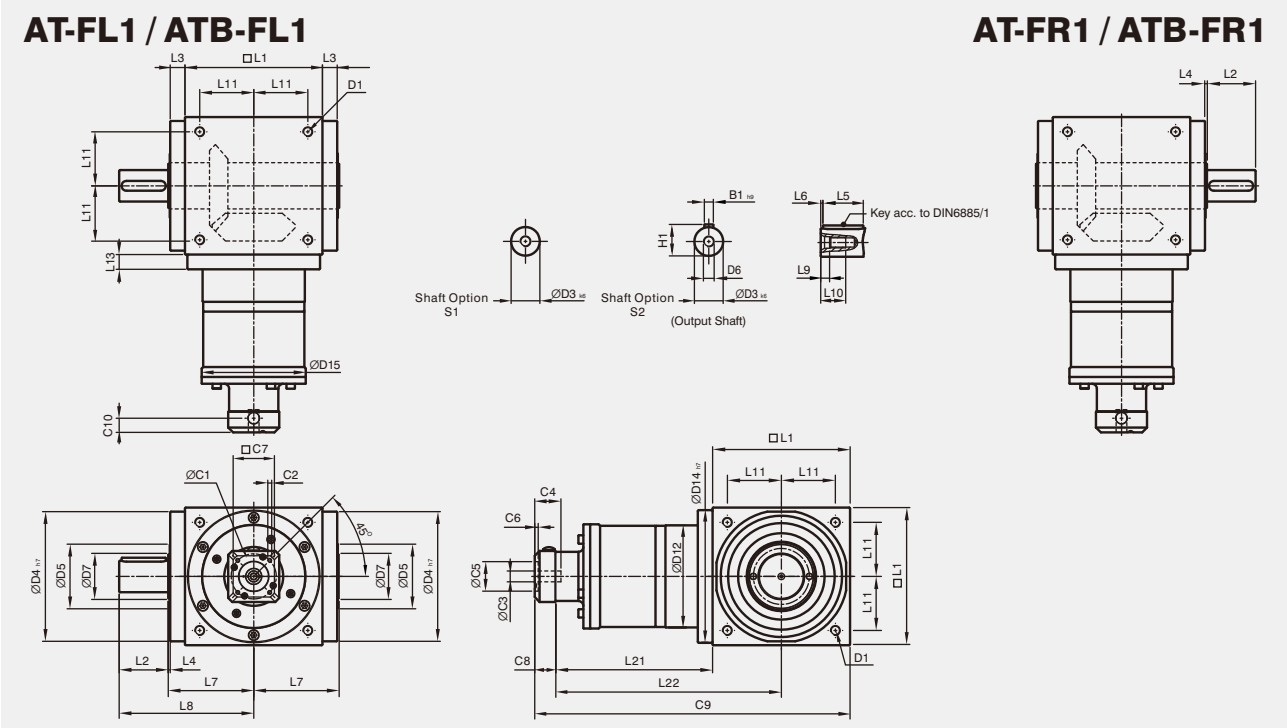

* The dimensions of ATB series are identical to AT series.

[unit: mm]

Dimension	AT110 FL1/FR1	AT140 FL1/FR1	AT170 FL1/FR1	AT210 FL1/FR1	AT240 FL1/FR1	AT280 FL1/FR1
D1	M8	M10	M12	M16	M16	M16
D3 k6	22	32	40	50	55	60
D4 h7	108	135	165	205	235	275
D5	53	68	83	104	124	144
D6	M8	M12	M16	M16	M16	M20
D7	33	47	55	75	85	110
D12	106	104	128	160	180	200
D14 h7	108	135	165	205	235	275
D15	107	106	127	158	178	198
L1	110	140	170	210	240	280
L2	40	50	60	75	85	110
L3	15	15	15	20	25	25
L4	2	2	2	2	2	2
L5	32	45	50	70	80	100
L6	4	2.5	5	2.5	2.5	5
L7	72	87	102	127	147	167
L8	112	137	162	202	232	277
L9	7.2	10	12	12	12	15
L10	19	28	36	36	36	42
L11	44	55	67	85	95	110
L13	15	15	15	20	25	25
L21	136.5	159.5	183.5	226	269	278
L22	191.5	229.5	268.5	331	389	418
C1[8]	46	46	70	70	100	100
C2[8]	M4	M4	M5	M5	M6	M6
C3[8]	≤12	≤12	≤16	≤16	≤24	≤24
C4[8]	30	30	34	34	40	40
C5[8]	30	30	50	50	80	80
C6[8]	3.5	3.5	8	8	4	4
C7[8]	42	42	60	60	92	92
C8[8]	21.5	21.5	21.5	21.5	20	20
C9[8]	268	321	375	457.5	529	578
C10[8]	14.5	14.5	15.5	15.5	13	13
B1 h9	6	10	12	14	16	18
H1	24.5	35	43	53.5	59	64

8. C1~C10 are motor specific dimensions (metric std shown). Refer to www.apexdyna.com and design Tool to view your specific motor mounting system.

ghv Vertriebs-GmbH | Am Schammacher Feld 47 | 85567 Grafing | Telefon + 49 80 92 81 89 0 | info@ghv.de | www.ghv.de

AT-FH / ATB-FH Series

Dimensions (1-stage, Ratio i=1~5)

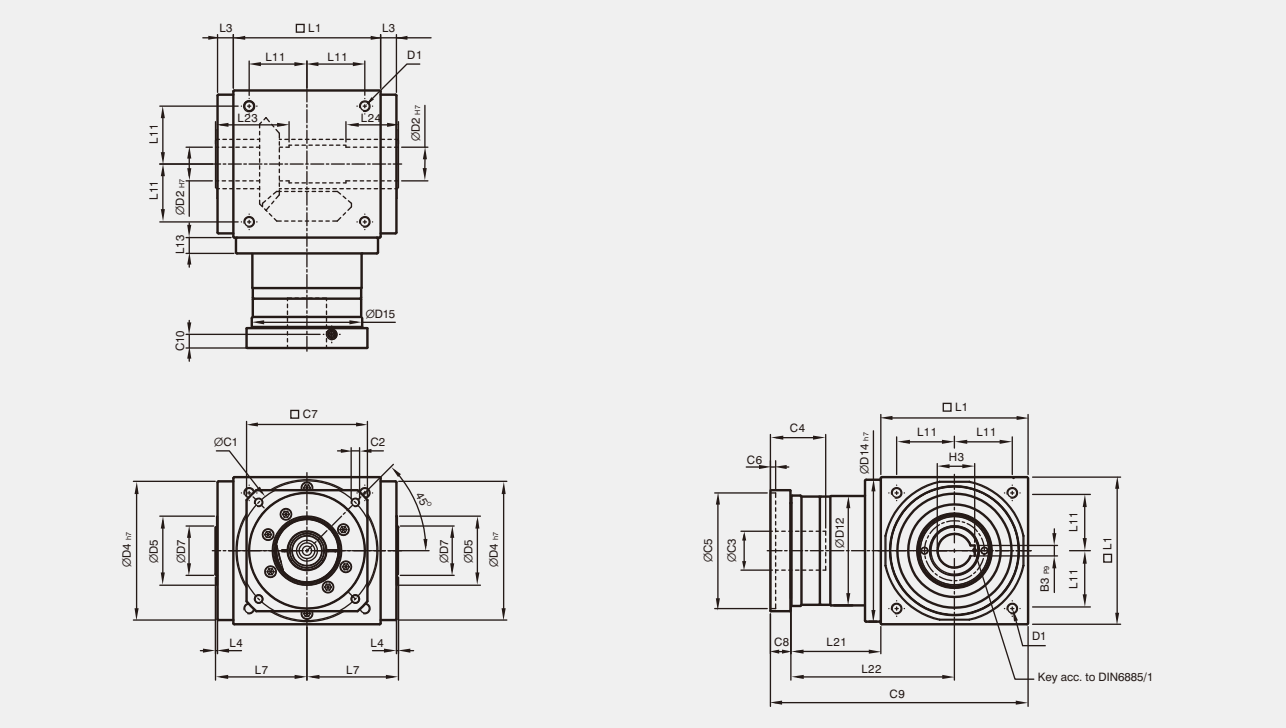

* The dimensions of ATB series are identical to AT series.

[unit: mm]

Dimension	AT065FH	AT075FH	AT090FH	AT110FH	AT140FH	AT170FH	AT210FH	AT240FH	AT280FH
D1	M4	M6	M6	M8	M10	M12	M16	M16	M16
D2 H7	13	14	18	22	32	40	50	55	60
D4 h7	63	73	88	108	135	165	205	235	275
D5	31	35	43	53	68	83	104	124	144
D7	21	22	28	33	47	55	75	85	110
D12	62	72	86	106	104	128	160	180	200
D14 h7	63	73	88	108	135	165	205	235	275
D15	62.9	72.9	87	107	105	127	158	178	198
L1	65	75	90	110	140	170	210	240	280
L3	13	14.5	15	15	15	15	20	25	25
L4	2	2	2	2	2	2	2	2	2
L7	47.5	54	62	72	87	102	127	147	167
L11	27	30	36	44	55	67	85	95	110
L13	13	15	15	15	15	15	20	25	25
L21	49	60.5	63	69.5	85.5	95	130	144.5	135
L22	81.5	98	108	124.5	155.5	180	235	264.5	275
L23	40	47	52	53	70	80	95	115	115
L24	30	32	35	35	50	55	65	80	80
C1[9]	46	70	100	100	130	165	215	215	235
C2[9]	M4	M5	M6	M6	M8	M10	M12	M12	M12
C3[9]	≤11 / ≤12[10]	≤14 / ≤15.875 / ≤16[10]	≤19	≤24	≤32	≤38	≤42	≤48	≤55
C4[9]	30	34	40	40	50	60	85	85	116
C5[9]	30	50	80	80	110	130	180	180	200
C6[9]	3.5	8	4	4	5	6	6	6	6
C7[9]	42	60	90	90	115	142	190	190	220
C8[9]	19.5	19	17	17	19.5	22.5	29	29	63
C9[9]	133.5	154.5	170	196.5	245	287.5	369	413.5	478
C10[9]	13.25	13.5	10.75	10.75	13	15	20.75	20.75	53.5
B3 P9	5	5	6	6	10	12	14	16	18
H3	15.3	16.3	20.8	24.8	35.3	43.3	53.8	59.3	64.4

9. C1~C10 are motor specific dimensions (metric std shown). Refer to www.apexdyna.com and design Tool to view your specific motor mounting system.
10. AT065FHM1 offers C3 ≤12 option; AT075FHM1 offers C3 ≤16 option; AT075FHM2 offers C3 ≤15.875 option.

ghv Vertriebs-GmbH | Am Schammacher Feld 47 | 85567 Grafing | Telefon + 49 80 92 81 89 0 | info@ghv.de | www.ghv.de

AT-FH / ATB-FH Series

Dimensions (2-stage, Ratio i=7~50)

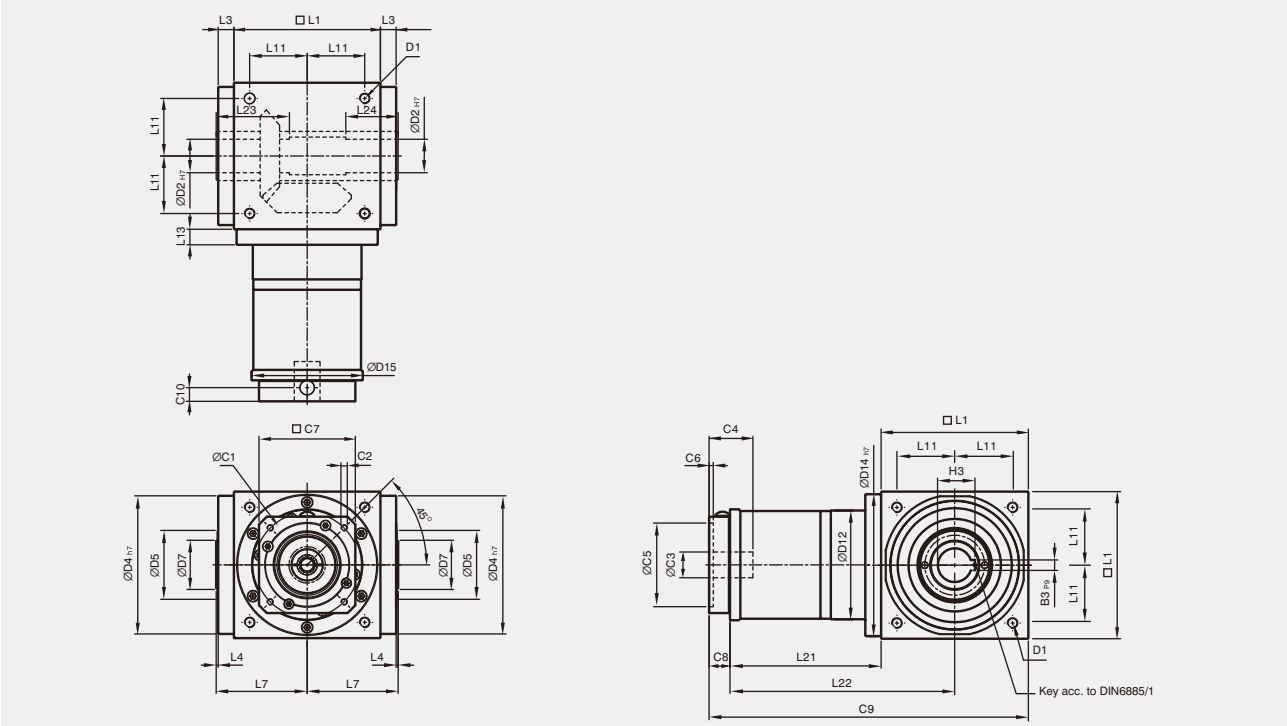

* The dimensions of ATB series are identical to AT series.

[unit: mm]

Dimension	AT065FH	AT075FH	AT090FH	AT110FH	AT140FH	AT170FH	AT210FH	AT240FH	AT280FH
D1	M4	M6	M6	M8	M10	M12	M16	M16	M16
D2 H7	13	14	18	22	32	40	50	55	60
D4 h7	63	73	88	108	135	165	205	235	275
D5	31	35	43	53	68	83	104	124	144
D7	21	22	28	33	47	55	75	85	110
D12	62	72	86	106	104	128	160	180	200
D14 h7	63	73	88	108	135	165	205	235	275
D15	62.9	72.9	87	107	106	127	158	178	198
L1	65	75	90	110	140	170	210	240	280
L3	13	14.5	15	15	15	15	20	25	25
L4	2	2	2	2	2	2	2	2	2
L7	47.5	54	62	72	87	102	127	147	167
L11	27	30	36	44	55	67	85	95	110
L13	13	15	15	15	15	15	20	25	25
L21	75	84.5	99	122	144.5	157.5	206.5	239	248
L22	107.5	122	144	177	214.5	242.5	311.5	359	388
L23	40	47	52	53	70	80	95	115	115
L24	30	32	35	35	50	55	65	80	80
C1[11]	46	46	70	100	100	100	130	165	165
C2[11]	M4	M4	M5	M6	M6	M6	M8	M10	M10
C3[11]	≤12	≤12	≤16	≤24	≤24	≤24	≤32	≤38	≤38
C4[11]	30	30	34	40	40	40	50	60	60
C5[11]	30	30	50	80	80	80	110	130	130
C6[11]	3.5	3.5	8	4	4	4	5	6	6
C7[11]	42	42	60	92	92	92	115	142	142
C8[11]	21.5	21.5	21.5	20	20	20	24	31	31
C9[11]	161.5	181	210.5	252	304.5	347.5	440.5	510	559
C10[11]	14.5	14.5	15.5	13	13	13	16	21	21
B3 P9	5	5	6	6	10	12	14	16	18
H3	15.3	16.3	20.8	24.8	35.3	43.3	53.8	59.3	64.4

11. C1~C10 are motor specific dimensions (metric std shown). Refer to www.apexdyna.com and design Tool to view your specific motor mounting system.

ghv Vertriebs-GmbH | Am Schammacher Feld 47 | 85567 Grafing | Telefon + 49 80 92 81 89 0 | info@ghv.de | www.ghv.de

AT-FH / ATB-FH Series

Dimensions (3-stage, Ratio i=75~500)

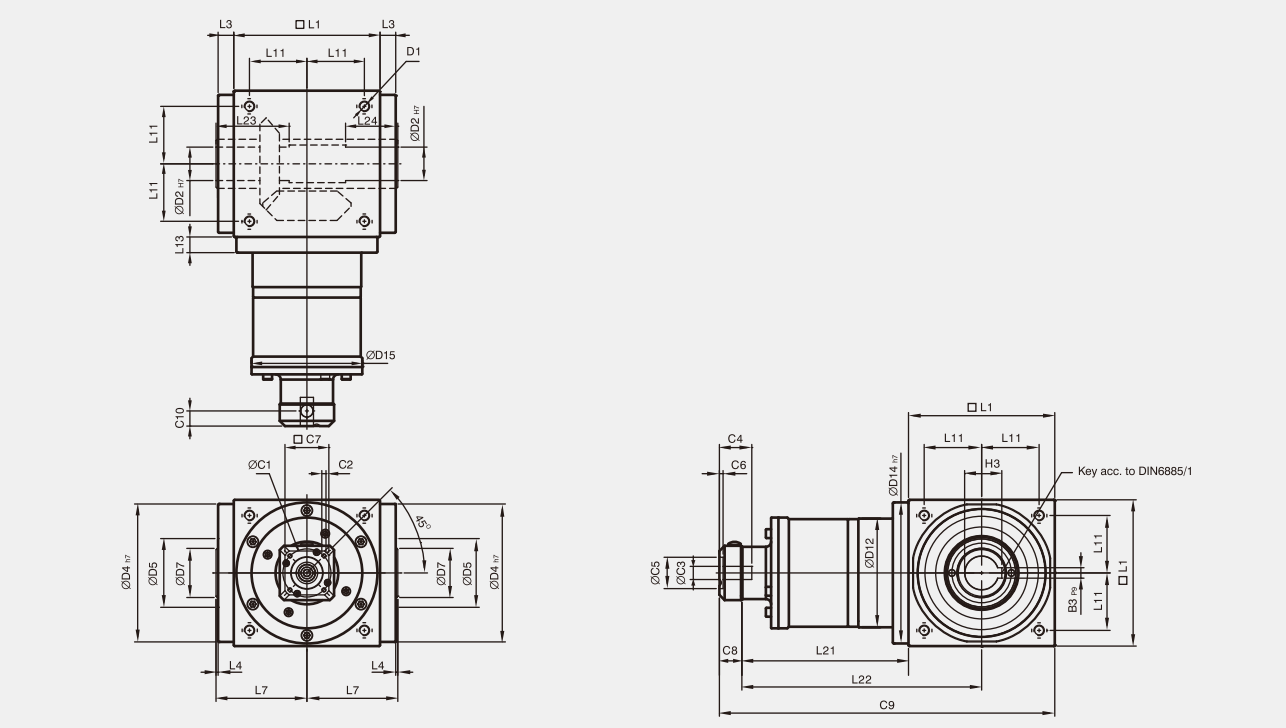

* The dimensions of ATB series are identical to AT series.

[unit: mm]

Dimension	AT110FH	AT140FH	AT170FH	AT210FH	AT240FH	AT280FH
D1	M8	M10	M12	M16	M16	M16
D2 H7	22	32	40	50	55	60
D4 h7	108	135	165	205	235	275
D5	53	68	83	104	124	144
D7	33	47	55	75	85	110
D12	106	104	128	160	180	200
D14 h7	108	135	165	205	235	275
D15	107	106	127	158	178	198
L1	110	140	170	210	240	280
L3	15	15	15	20	25	25
L4	2	2	2	2	2	2
L7	72	87	102	127	147	167
L11	44	55	67	85	95	110
L13	15	15	15	20	25	25
L21	136.5	159.5	183.5	226	269	278
L22	191.5	229.5	268.5	331	389	418
L23	53	70	80	95	115	115
L24	35	50	55	65	80	80
C1[12]	46	46	70	70	100	100
C2[12]	M4	M4	M5	M5	M6	M6
C3[12]	≤12	≤12	≤16	≤16	≤24	≤24
C4[12]	30	30	34	34	40	40
C5[12]	30	30	50	50	80	80
C6[12]	3.5	3.5	8	8	4	4
C7[12]	42	42	60	60	92	92
C8[12]	21.5	21.5	21.5	21.5	20	20
C9[12]	268	321	375	457.5	529	578
C10[12]	14.5	14.5	15.5	15.5	13	13
B3 P9	6	10	12	14	16	18
H3	24.8	35.3	43.3	53.8	59.3	64.4

12. C1~C10 are motor specific dimensions (metric std shown). Refer to www.apexdyna.com and design tool to view your specific motor mounting system.

ghv Vertriebs-GmbH | Am Schammacher Feld 47 | 85567 Grafing | Telefon + 49 80 92 81 89 0 | info@ghv.de | www.ghv.de

AT-FC / ATB-FC Series

Dimensions (1-stage, Ratio i=1~5)

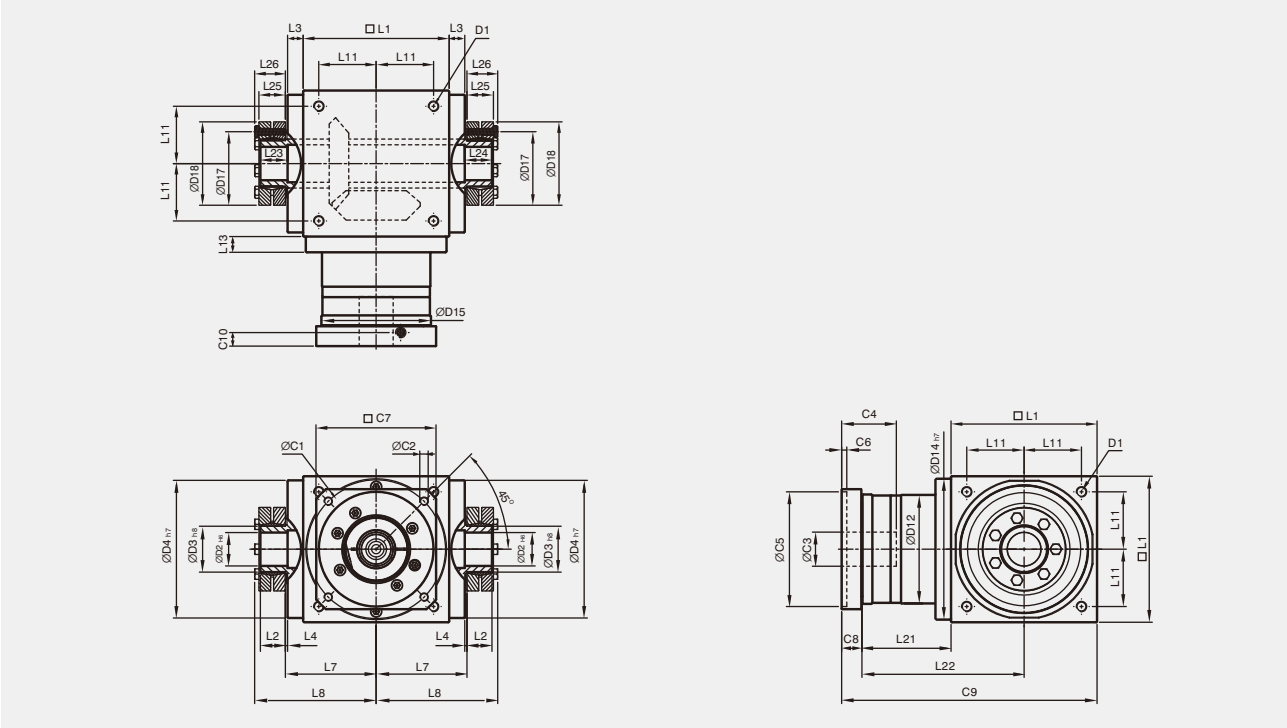

* The dimensions of ATB series are identical to AT series.

[unit: mm]

Dimension	AT065FC	AT075FC	AT090FC	AT110FC	AT140FC	AT170FC	AT210FC	AT240FC	AT280FC
D1	M4	M6	M6	M8	M10	M12	M16	M16	M16
D2 H6	13	14	18	22	32	40	50	55	60
D3 h8	16	16	22	25	44	50	62	68	75
D4 h7	63	73	88	108	135	165	205	235	275
D12	62	72	86	106	104	128	160	180	200
D14 h7	63	73	88	108	135	165	205	235	275
D15	62.9	72.9	87	107	105	130	158	178	198
D17	26	26	36	38	61	70	86	86	100
D18	41	41	50	50	80	90	110	115	138
L1	65	75	90	110	140	170	210	240	280
L2	14	14	18	18	24	26	29	29	30.5
L3	13	14.5	15	15	15	15	20	25	25
L4	2	2	2	2	2	2	2	2	2
L7	47.5	54	62	72	87	102	127	147	167
L8	66	72.5	85	95	116.5	133.5	161.5	181.5	205
L11	27	30	36	44	55	67	85	95	110
L13	13	15	15	15	15	15	20	25	25
L21	49	60.5	63	69.5	85.5	95	130	144.5	135
L22	81.5	98	108	124.5	155.5	180	235	264.5	275
L23	15	15	20	20	26	28	31	31	32.5
L24	15	15	20	20	26	28	31	31	32.5
L25	15	15	19.5	19.5	25.5	27.5	30.5	30.5	32.5
L26	18.5	18.5	23	23	29.5	31.5	34.5	34.5	38
C1[13]	46	70	100	100	130	165	215	215	235
C2[13]	M4	M5	M6	M6	M8	M10	M12	M12	M12
C3[13]	≤11 / ≤12[14]	≤14 / ≤15.875 / ≤16[14]	≤19	≤24	≤32	≤38	≤42	≤48	≤55
C4[13]	30	34	40	40	50	60	85	85	116
C5[13]	30	50	80	80	110	130	180	180	200
C6[13]	3.5	8	4	4	5	6	6	6	6
C7[13]	42	60	90	90	115	142	190	190	220
C8[13]	19.5	19	17	17	19.5	22.5	29	29	63
C9[13]	133.5	154.5	170	196.5	245	287.5	369	413.5	478
C10[13]	13.25	13.5	10.75	10.75	13	15	20.75	20.75	53.5

13. C1~C10 are motor specific dimensions (metric std shown). Refer to www.apexdyna.com and design tool to view your specific motor mounting system.
14. AT065FCM1 offers C3 ≤12 option; AT075FCM1 offers C3 ≤16 option; AT075FCM2 offers C3 ≤15.875 option.

ghv Vertriebs-GmbH | Am Schammacher Feld 47 | 85567 Grafing | Telefon + 49 80 92 81 89 0 | info@ghv.de | www.ghv.de

AT-FC / ATB-FC Series

Dimensions (2-stage, Ratio i=7~50)

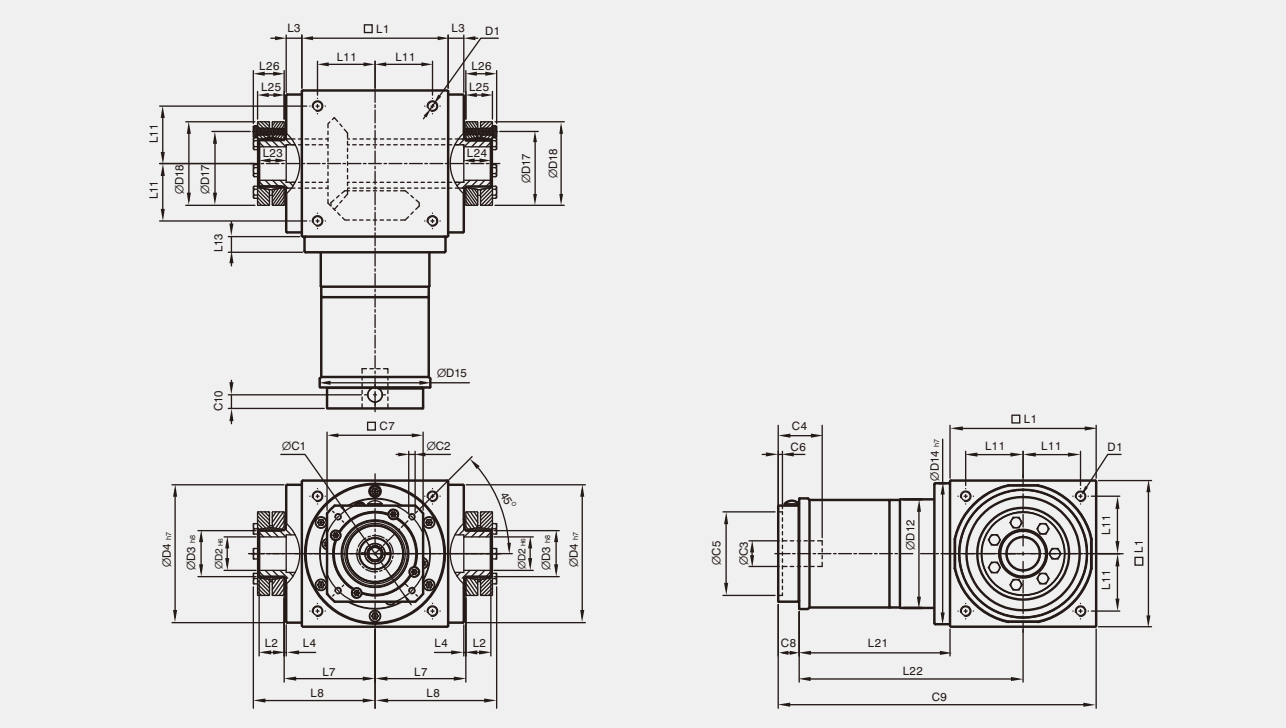

* The dimensions of ATB series are identical to AT series.

[unit: mm]

Dimension	AT065FC	AT075FC	AT090FC	AT110FC	AT140FC	AT170FC	AT210FC	AT240FC	AT280FC
D1	M4	M6	M6	M8	M10	M12	M16	M16	M16
D2 H6	13	14	18	22	32	40	50	55	60
D3 h8	16	16	22	25	44	50	62	68	75
D4 h7	63	73	88	108	135	165	205	235	275
D12	62	72	86	106	104	128	160	180	200
D14 h7	63	73	88	108	135	165	205	235	275
D15	62.9	72.9	87	107	106	127	158	178	198
D17	26	26	36	38	61	70	86	86	100
D18	41	41	50	50	80	90	110	115	138
L1	65	75	90	110	140	170	210	240	280
L2	14	14	18	18	24	26	29	29	30.5
L3	13	14.5	15	15	15	15	20	25	25
L4	2	2	2	2	2	2	2	2	2
L7	47.5	54	62	72	87	102	127	147	167
L8	66	72.5	85	95	116.5	133.5	161.5	181.5	205
L11	27	30	36	44	55	67	85	95	110
L13	13	15	15	15	15	15	20	25	25
L21	75	84.5	99	122	144.5	157.5	206.5	239	248
L22	107.5	122	144	177	214.5	242.5	311.5	359	388
L23	15	15	20	20	26	28	31	31	32.5
L24	15	15	20	20	26	28	31	31	32.5
L25	15	15	19.5	19.5	25.5	27.5	30.5	30.5	32.5
L26	18.5	18.5	23	23	29.5	31.5	34.5	34.5	38
C1[15]	46	46	70	100	100	100	130	165	165
C2[15]	M4	M4	M5	M6	M6	M6	M8	M10	M10
C3[15]	≤12	≤12	≤16	≤24	≤24	≤24	≤32	≤38	≤38
C4[15]	30	30	34	40	40	40	50	60	60
C5[15]	30	30	50	80	80	80	110	130	130
C6[15]	3.5	3.5	8	4	4	4	5	6	6
C7[15]	42	42	60	92	92	92	115	142	142
C8[15]	21.5	21.5	21.5	20	20	20	24	31	31
C9[15]	161.5	181	210.5	252	304.5	347.5	440.5	510	559
C10[15]	14.5	14.5	15.5	13	13	13	16	21	21

15. C1~C10 are motor specific dimensions (metric std shown). Refer to www.apexdyna.com and design tool to view your specific motor mounting system.

ghv Vertriebs-GmbH | Am Schammacher Feld 47 | 85567 Grafing | Telefon + 49 80 92 81 89 0 | info@ghv.de | www.ghv.de

AT-FC / ATB-FC Series

Dimensions (3-stage, Ratio i=75~500)

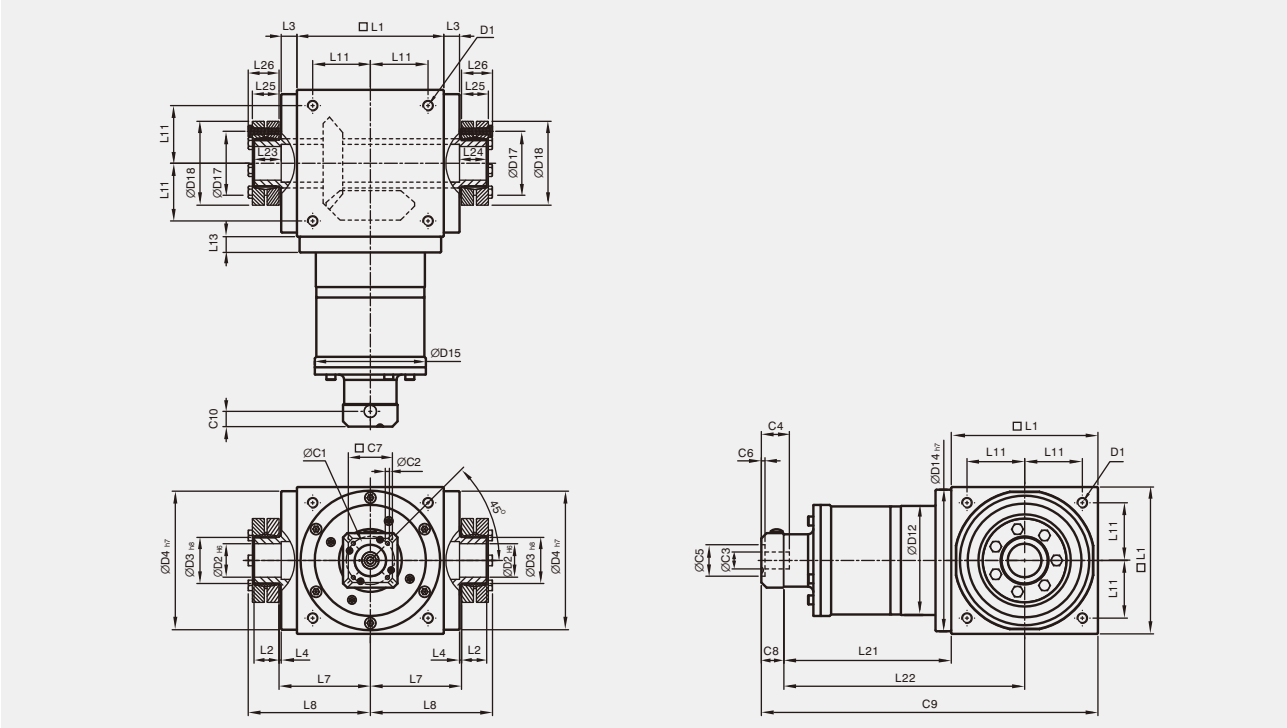

* The dimensions of ATB series are identical to AT series.

[unit: mm]

Dimension	AT110FC	AT140FC	AT170FC	AT210FC	AT240FC	AT280FC
D1	M8	M10	M12	M16	M16	M16
D2 H6	22	32	40	50	55	60
D3 h8	25	44	50	62	68	75
D4 h7	108	135	165	205	235	275
D12	106	104	128	160	180	200
D14 h7	108	135	165	205	235	275
D15	107	106	127	158	178	198
D17	38	61	70	86	86	100
D18	50	80	90	110	115	138
L1	110	140	170	210	240	280
L2	18	24	26	29	29	30.5
L3	15	15	15	20	25	25
L4	2	2	2	2	2	2
L7	72	87	102	127	147	167
L8	95	116.5	133.5	161.5	181.5	205
L11	44	55	67	85	95	110
L13	15	15	15	20	25	25
L21	136.5	159.5	183.5	226	269	278
L22	191.5	229.5	268.5	331	389	418
L23	20	26	28	31	31	32.5
L24	20	26	28	31	31	32.5
L25	19.5	25.5	27.5	30.5	30.5	32.5
L26	23	29.5	31.5	34.5	34.5	38
C1[16]	46	46	70	70	100	100
C2[16]	M4	M4	M5	M5	M6	M6
C3[16]	≤12	≤12	≤16	≤16	≤24	≤24
C4[16]	30	30	34	34	40	40
C5[16]	30	30	50	50	80	80
C6[16]	3.5	3.5	8	8	4	4
C7[16]	42	42	60	60	92	92
C8[16]	21.5	21.5	21.5	21.5	20	20
C9[16]	268	321	375	457.5	529	578
C10[16]	14.5	14.5	15.5	15.5	13	13

16. C1~C10 are motor specific dimensions (metric std shown). Refer to www.apexdyna.com and design tool to view your specific motor mounting system.

ghv Vertriebs-GmbH | Am Schammacher Feld 47 | 85567 Grafing | Telefon + 49 80 92 81 89 0 | info@ghv.de | www.ghv.de

Shrink Disc Power Lock

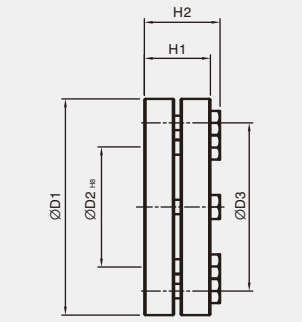

[unit: mm]

C / FC Series	D1	D2	D3	H1	H2
SSD-d16xdw14	41	16	26	15	18.5
SSD-d22xdw18	50	22	36	19.5	23
SSD-d25xdw22	50	25	38	19.5	23
SSD-d44xdw32	80	44	61	25.5	29.5
SSD-d50xdw40	90	50	70	27.5	31.5
SSD-d62xdw50	110	62	86	30.5	34.5
SSD-d68xdw55	115	68	86	30.5	34.5
SSD-d75xdw60	138	75	100	32.5	38

Selection of the Optimum Gearbox

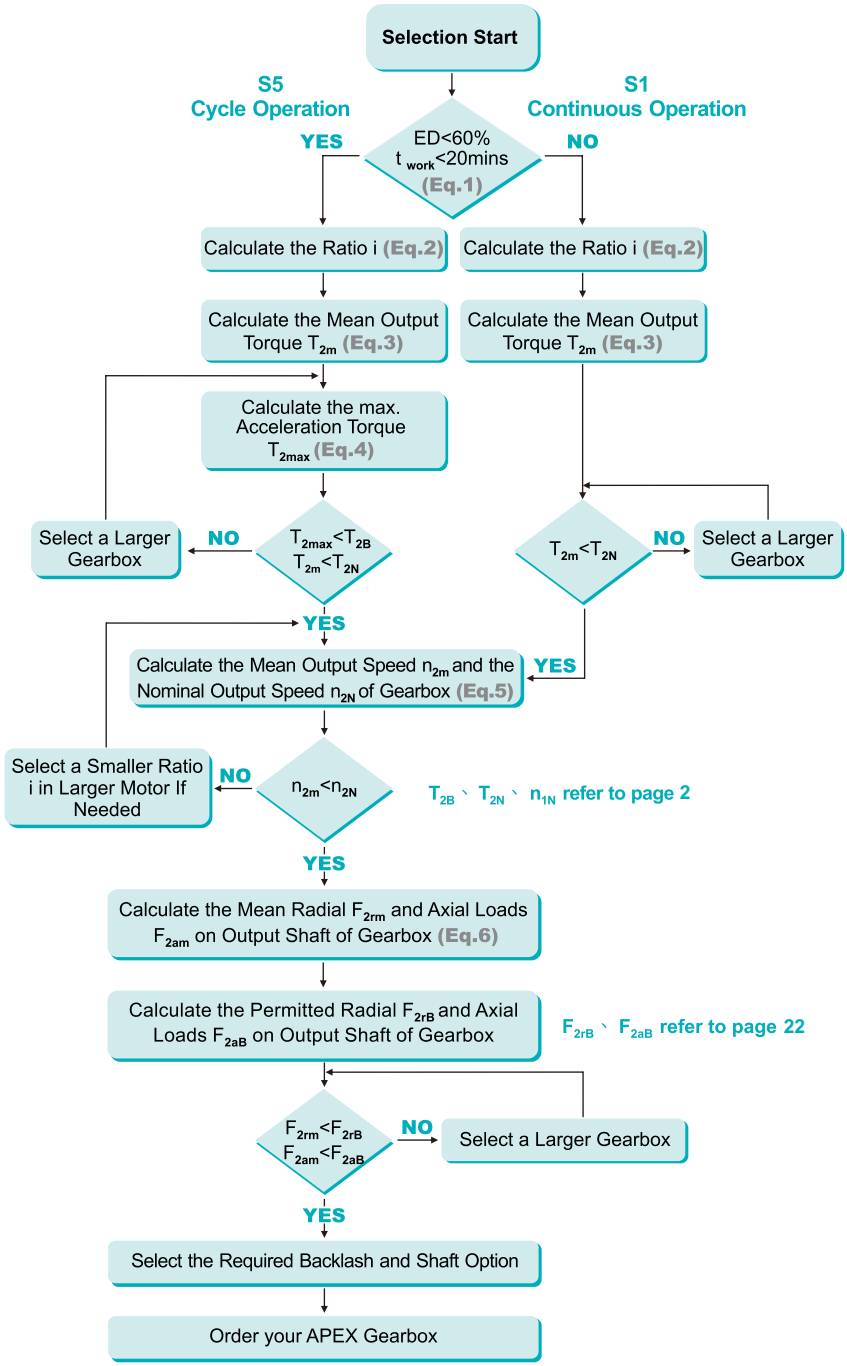

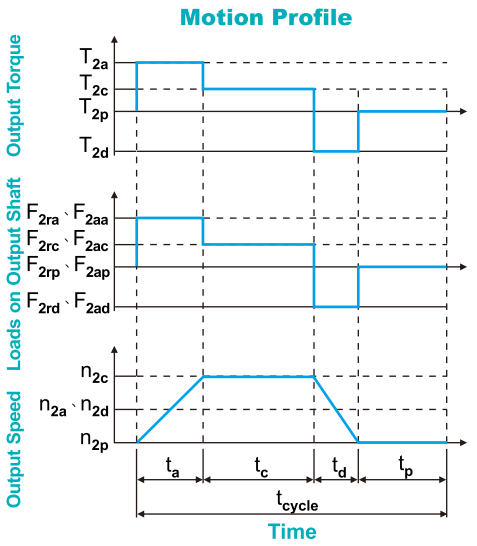

1. $ED = \frac{t_a + t_c + t_d}{t_{cycle}} \times 100\%$, $t_{work} = t_a + t_c + t_d$

Index : a. Acceleration, c. Constant, d. Deceleration, p. Pause **(Eq.1)**

2. $i \cong \frac{n_m}{n_{work}}$

n_m Output Speed of the Motor

n_{work} Working Speed **(Eq.2)**

3. $T_{2m} = \sqrt[3]{\frac{n_{2a} \times t_a \times T_{2a}^3 + n_{2c} \times t_c \times T_{2c}^3 + n_{2d} \times t_d \times T_{2d}^3}{n_{2a} \times t_a + n_{2c} \times t_c + n_{2d} \times t_d}}$ **(Eq.3)**

4. $T_{2max} = T_{mB} \times i \times k_s \times \eta$

where K_s is

K_s	No. of Cycles / hr
1.0	0~1,000
1.1	1,000 ~ 1,500
1.3	1,500 ~ 2,000
1.6	2,000 ~ 3,000
1.8	3,000 ~ 5,000
2.0	5,000 ~ 9,000
2.05	9,000 ~ 10,000
not recommended	above 10,000

ghv Vertriebs-GmbH | Am Schammacher Feld 47 | 85567 Grafing | Telefon + 49 80 92 81 89 0 | info@ghv.de | www.ghv.de

Recommended (for S5 Cycle Operation)

The general design is given for

$$\frac{J_L}{i^2} \leq 4 \times J_m$$

The optimal design is given for

$$\frac{J_L}{i^2} \cong J_m$$

J_L Load Inertia

J_m Motor Inertia

T_{mB} Max. Output Torque of the Motor

η Efficiency of the Gearbox

(Eq.4)

5. $n_{2a} = n_{2d} = \frac{1}{2} \times n_{2c}$

$$n_{2m} = \frac{n_{2a} \times t_a + n_{2c} \times t_c + n_{2d} \times t_d}{t_a + t_c + t_d}$$

$$n_{2N} = \frac{n_{1N}}{i}$$

(Eq.5)

6. $$F_{2rm} = \sqrt[3]{\frac{n_{2a} \times t_a \times F_{2ra}^3 + n_{2c} \times t_c \times F_{2rc}^3 + n_{2d} \times t_d \times F_{2rd}^3}{n_{2a} \times t_a + n_{2c} \times t_c + n_{2d} \times t_d}}$$

$$F_{2am} = \sqrt[3]{\frac{n_{2a} \times t_a \times F_{2aa}^3 + n_{2c} \times t_c \times F_{2ac}^3 + n_{2d} \times t_d \times F_{2ad}^3}{n_{2a} \times t_a + n_{2c} \times t_c + n_{2d} \times t_d}}$$

(Eq.6)

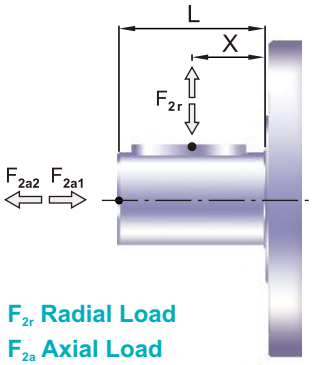

F_{2r} Radial Load
F_{2a} Axial Load

Permitted Radial and Axial Loads on Input and Output Shaft of the Gearbox

The permitted radial and axial loads on output shaft of the gearbox depend on the design of the gearbox supporting bearings.

APEX use the extension straddle oversized Tapered Roller bearing design.

It can take heavy loads from both axes.

AT / ATB Input
Permitted Radial Load F_{1rB}

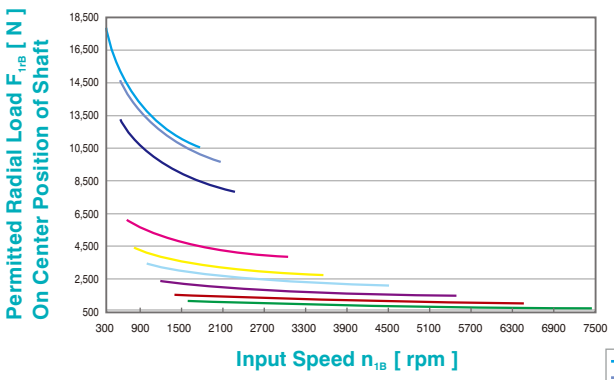

AT / ATB Output
Permitted Radial Load F_{2rB}

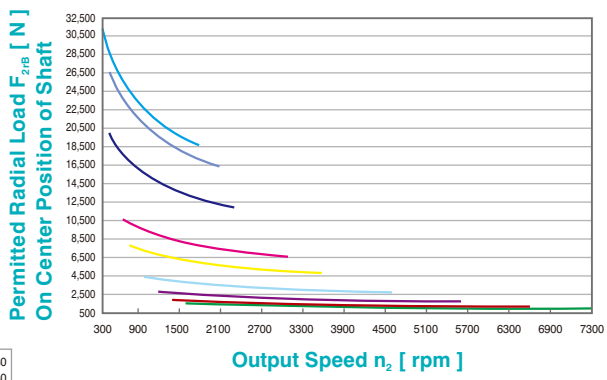

If radial force F_{2r} is exert on the center of the output shaft X=1/2 x L. Under various operating condition the lifetime is over 30,000 hours. The permitted radial load is given on left diagram.

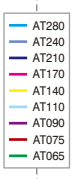

AT / ATB Input

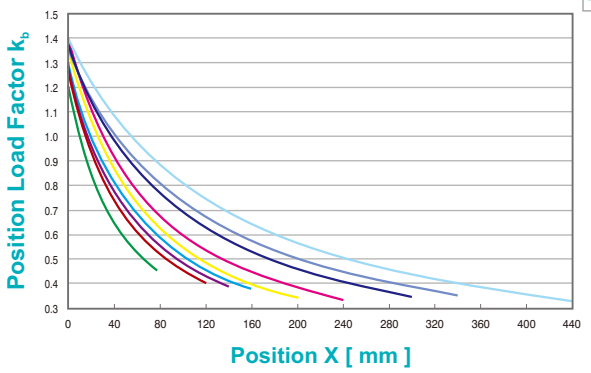

AT / ATB Output

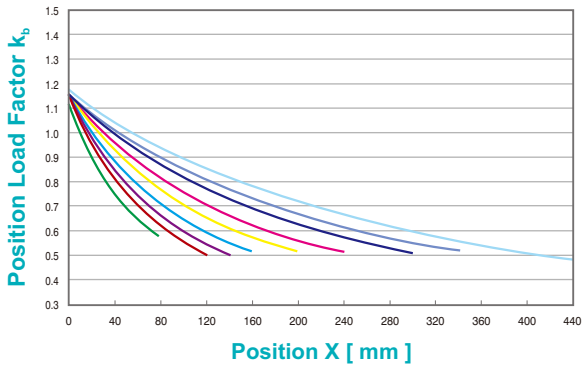

If radial force F_{2r} is not exert on the center of the output shaft X<1/2 x L or X>1/2 x L The permitted radial and axial loads can be calculated by the position load factor K_b on the left diagram.

ghv Vertriebs-GmbH | Am Schammacher Feld 47 | 85567 Grafing | Telefon + 49 80 92 81 89 0 | info@ghv.de | www.ghv.de

Rotation Direction

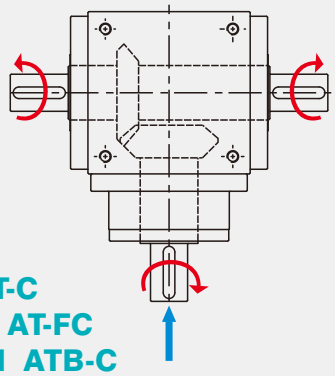

AT-L AT-H AT-C
AT-FL AT-FH AT-FC
ATB-L ATB-H ATB-C
ATB-FL ATB-FH ATB-FC

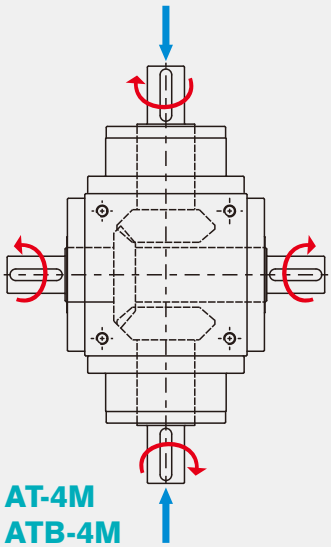

AT-4M
ATB-4M

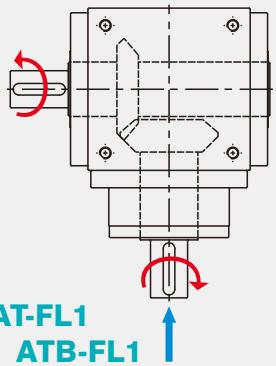

AT-L1 AT-FL1
ATB-L1 ATB-FL1

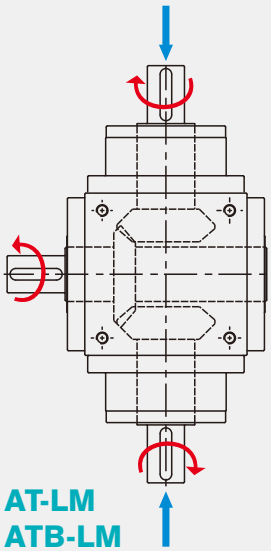

AT-LM
ATB-LM

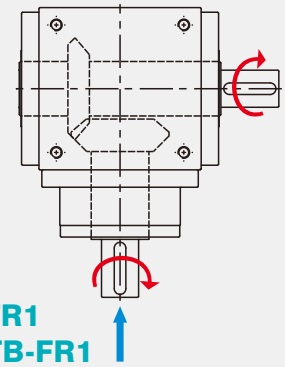

AT-R1 AT-FR1
ATB-R1 ATB-FR1

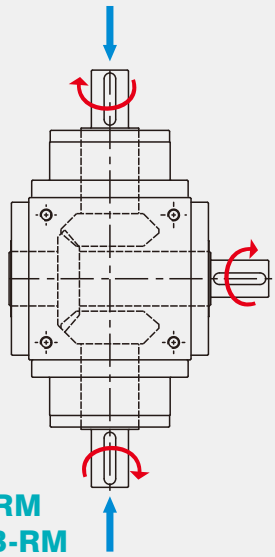

AT-RM
ATB-RM

ghv Vertriebs-GmbH | Am Schammacher Feld 47 | 85567 Grafing | Telefon + 49 80 92 81 89 0 | info@ghv.de | www.ghv.de

Ordering Code

AT065 / ATB065 – L – 001.5 – S1

Gearbox Size :
AT065, AT075, AT090, AT110, AT140,
AT170, AT210, AT240, AT280
ATB065, ATB075, ATB090, ATB110, ATB140,
ATB170, ATB210, ATB240, ATB280

Ratio :
1 Stage: 1, 1.5, 2, 3, 4, 5

Gearbox :
L / L1 / H / C / R1 / LM / RM / 4M

Shaft Option :
S1: Smooth Output Shaft
S2: Output Shaft with Key

Ordering Example: AT065-L-001.5-S1
ATB065-L-001.5-S1

AT210 / ATB210 – FL1 – 200 – S1 / MOTOR

Gearbox Size :
AT065, AT075, AT090, AT110, AT140,
AT170, AT210, AT240, AT280
ATB065, ATB075, ATB090, ATB110, ATB140,
ATB170, ATB210, ATB240, ATB280

Ratio :
1 Stage: 1, 1.5, 2, 3, 4, 5
2 Stage: 7, 10, 15, 20, 25, 35, 50
3 Stage: 75, 100, 125, 150, 200,
250, 350, 500

Motor Designation :
Manufacturer Type
And Model

Gearbox :
FL / FLM1 / FLM2 / FL1 / FL1M1 / FL1M2 /
FR1 / FR1M1 / FR1M2 / FH / FHM1 / FHM2 /
FC / FCM1 / FCM2

Shaft Option :
S1: Smooth Output Shaft
S2: Output Shaft with Key

Ordering Example: AT210-FL1-200-S1 / SIEMENS 1FK6 032-6AK71
ATB210-FL1-200-S1 / SIEMENS 1FK6 032-6AK71

ghv Vertriebs-GmbH | Am Schammacher Feld 47 | 85567 Grafing | Telefon + 49 80 92 81 89 0 | info@ghv.de | www.ghv.de

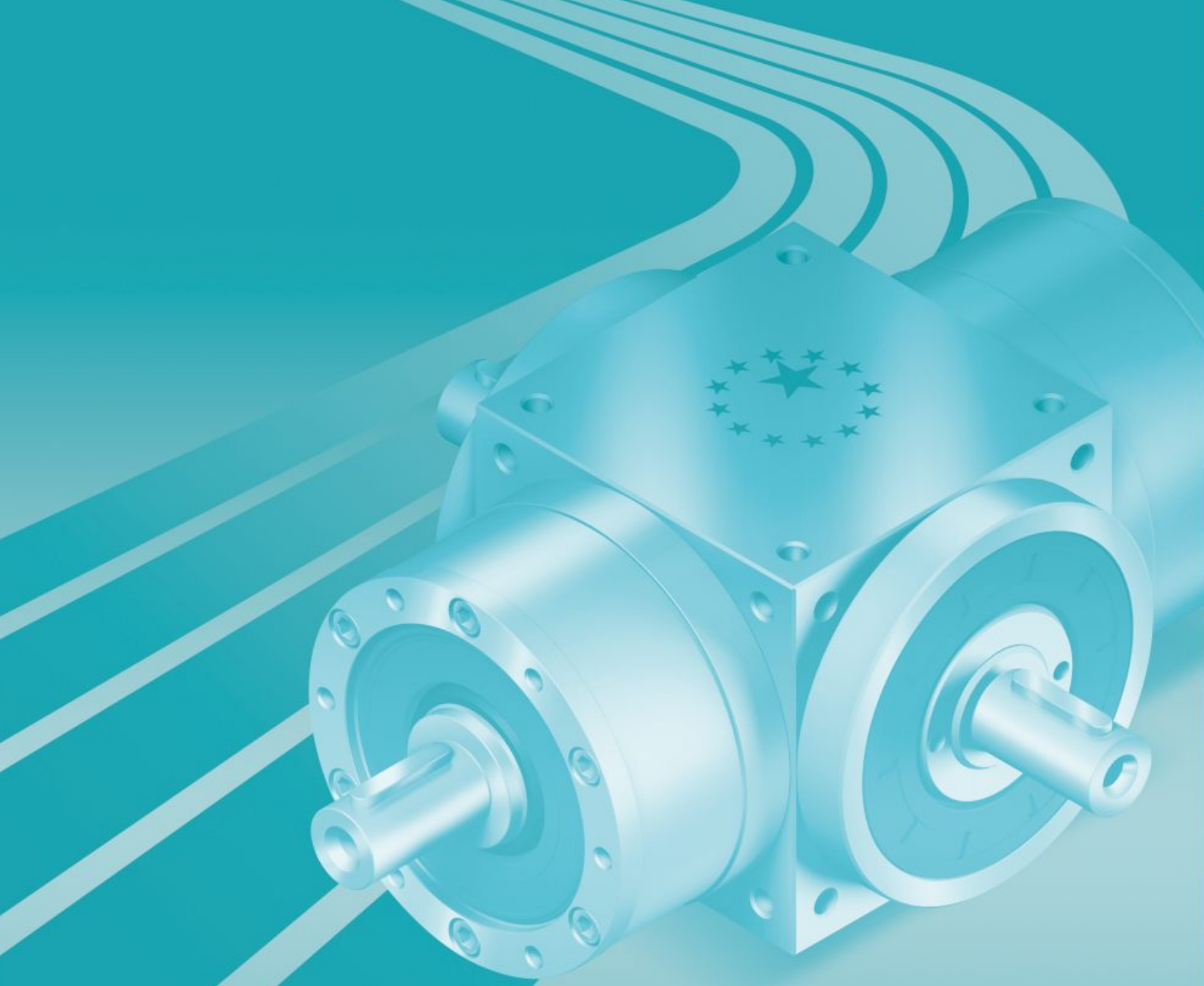

AT/ATB SERIES

www.apexdyna.com

APEX DYNAMICS, INC.

No.10, Keyuan 3rd Rd., Situn District, Taichung City 407, Taiwan (R.O.C.)

Tel: 886 4 24650219 / Fax: 886 4 24650118

E-mail: sales@apexdyna.com

Website: www.apexdyna.com

APEX-2014-12-AT/ATB Series-1.0V

ghv Vertriebs-GmbH | Am Schammacher Feld 47 | 85567 Grafing | Telefon + 49 80 92 81 89 0 | info@ghv.de | www.ghv.de