SQ-MIM0128201

Panasonic

Compact AC geared motor

Type :Induction motor
UL.c-UL.CE.CCC approved
M9MZ60GK4CGA 4P 60W 380/400V 50Hz
Time rating:S1(cont.)
Thermal Class:130(B) IP54

Characteristics

Vortage	Frequency	rated cuurent	rated input	rated speed	rated torque	starting torque	starting current
380V	50Hz	0.22A	103W	1325min^{-1}	0.43N·m	0.88N·m	0.62A
400V	50Hz	0.22A	103W	1325min^{-1}	0.43N·m	1.0N·m	0.65A

General Dimension Tolerance (±)

Assembly					Angle	Dimension of A (Shorter Side)		
Up to 6	Over 6 to 30	Over 30 to 120	Over 120 to 300	Over 300	Up to 10	Over 10 to 50	Over 50 to 100	Over 100
0.3	0.5	0.7	1.2	2.0	5°	3°	1.5°	45'

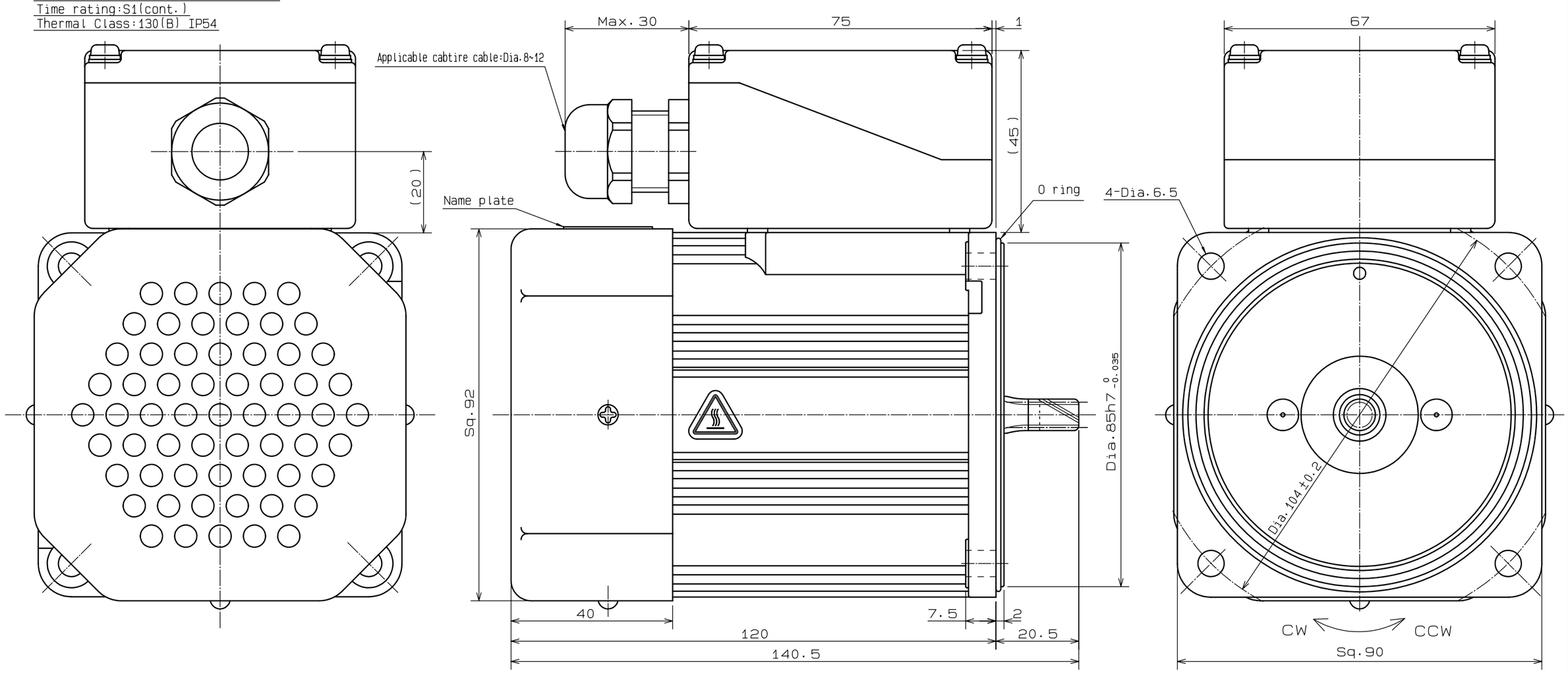

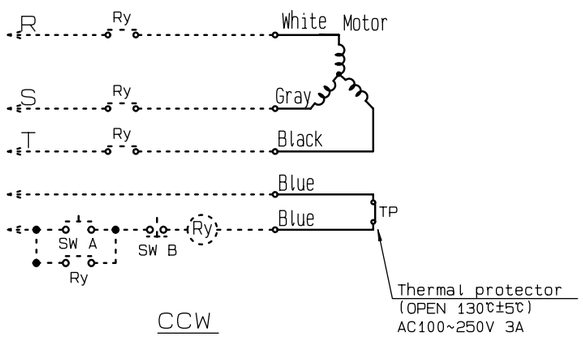

CCW

Connection diagram

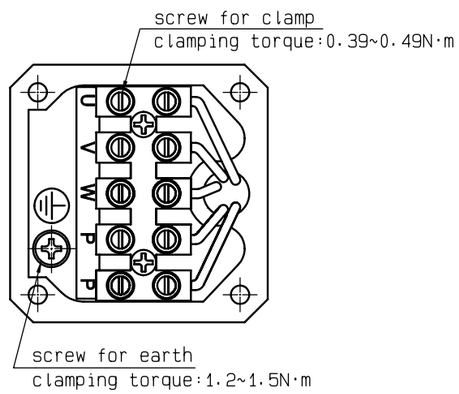

Terminal

General specification

1. Operational condition:ambient temperature -10℃~+40℃, the humidity:less than 85%RH.
2. Shaft end edges assumes it less than 5/100(TIR).
3. Please do not disassemble the motor. (It causes a peculiar noise.)
4. This motor has a thermal protector.
5. Body color is dark brown.
6. Application gear heads:MZ9G□B(a ball bearing hinge nothing)
   MY9G□B(a ball bearing hinge existence)
   MR9G□B(a ball bearing hinge nothing)
   MP9G□B(a ball bearing hinge existence)
7. Application decimal gear heads:MZ9G10XB
8. When put a gear head together, please confirm that an O ring attached to a motor.
   (If there is not an O ring it cause an oil blur.)

Scale	MATSUSHITA ELECTRIC INDUSTRIAL CO.,LTD.			Agreement	Model	M9MZ60GK4CGA
1 : 1	3rd Angle System / Unit:mm				Name	OUTLINE DRAWING
	Weight:3.0kg					
Designed	Drawn	Checked	Checked	Checked	No.	SQ-MIM0128201
ITO	ITO	SHIMIZU		KITAMURA		
2006/10/27	2006/10/27	2006/10/31		2006/10/31		

MARCHAND G	CLASS	TRACE	
IM1	E	ITO	2006/10/27

Do NOT scale the drawings, instead rely on the dimensions and their definitions